CUI Devices is now Same Sky! Learn More



# SERIES: SDS-J | DESCRIPTION: STANDARD DIN CONNECTOR

## FEATURES

- PCB mount
- right angle orientation
- 3~8, 13 pins

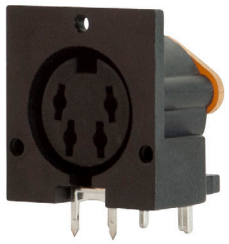

## PART NUMBER KEY

SDS - XX J

Base Number

Pin Options
30* = 3 pins
40 = 4 pins
50 = 5 pins, 180 degrees
60 = 6 pins
70 = 7 pins
80 = 8 pins
SDD-130J = 13 pins

Notes: *Discontinued model SDS-30J

## SPECIFICATIONS

| parameter | conditions/description | min | typ | max | units |
|---|---|---|---|---|---|
| rated input voltage | | | 100<br>24 | | Vac<br>Vdc |
| rated input current | at 100 Vac<br>at 24 Vdc | | 2<br>1 | | A<br>A |
| contact resistance | | | | 30 | mΩ |
| insulation resistance | at 250 Vdc | 50 | | | MΩ |
| voltage withstand | for 1 minute | | | 250 | Vac |
| insertion force | | | | 6.5 | kg |
| withdrawal force | | 0.5 | | 5 | kg |
| operating temperature | | -40 | | 85 | °C |
| storage temperature | | -40 | | 85 | °C |
| life | | | 1,000 | | cycles |
| flammability rating | UL94V-0 | | | | |
| RoHS | yes | | | | |

# MECHANICAL DRAWING (SDS-30J)

units: mm
tolerance: ±0.2 mm

| DESCRIPTION | MATERIAL | PLATING/COLOR |
|---|---|---|
| earth terminal | phosphor bronze | tin |
| contact terminals | brass | tin |
| plate | bakelite | |
| plastic | PBT | |

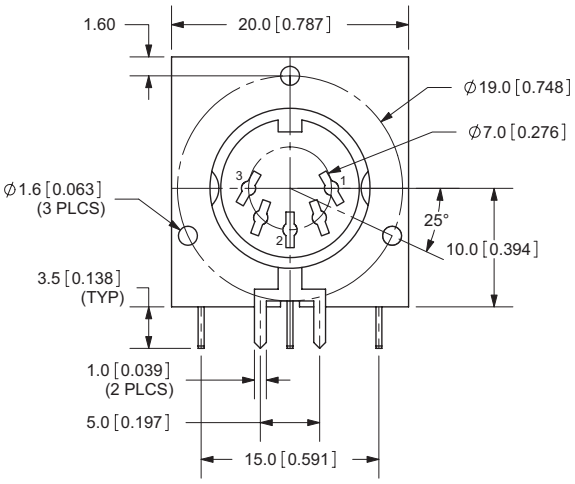


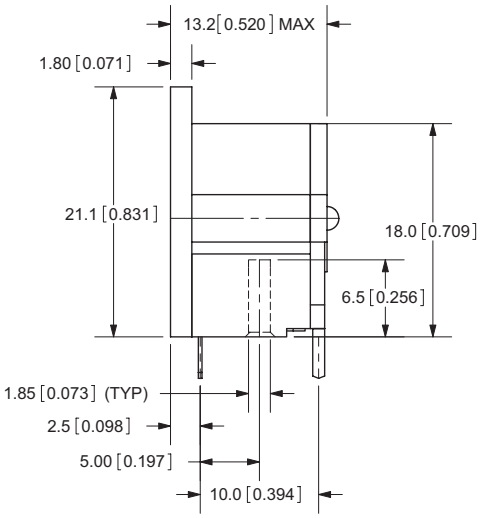


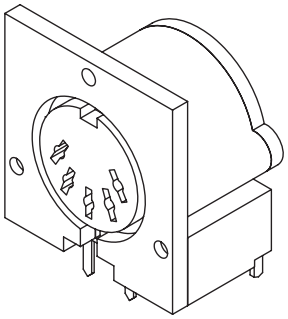

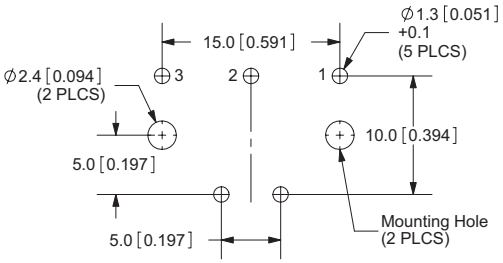


Recommended PCB Layout
Top View

## MECHANICAL DRAWING (SDS-40J)

units: mm
tolerance: ±0.3 mm
PCB tolerance: ±0.05 mm

| ITEM | DESCRIPTION | MATERIAL | PLATING/COLOR |
|---|---|---|---|
| 1 | housing | PBT (UL94V-0) | black |
| 2 | ground | phosphor bronze | silver |
| 3 | cover | PBT (UL94V-0) | black |
| 4 | terminal | phosphor bronze | silver |

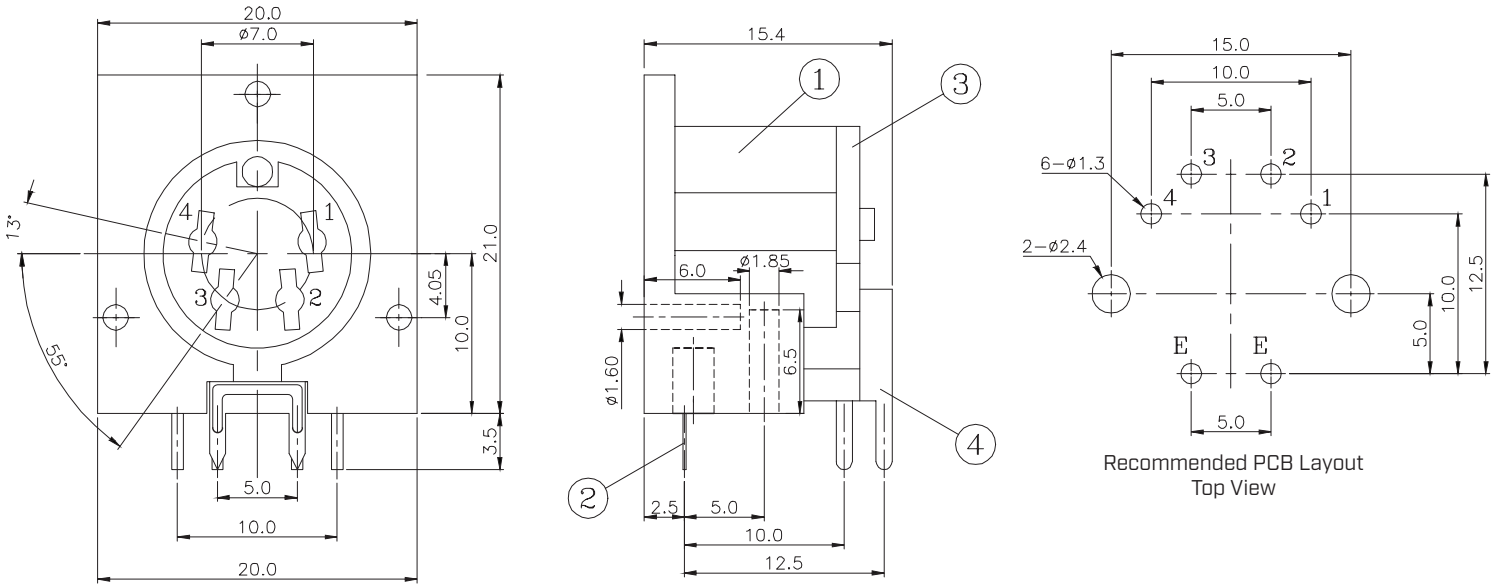


Recommended PCB Layout
Top View

## MECHANICAL DRAWING (SDS-50J)

units: mm
tolerance: ±0.3 mm
PCB tolerance: ±0.05 mm

| ITEM | DESCRIPTION | MATERIAL | PLATING/COLOR |
|---|---|---|---|
| 1 | housing | PBT (UL94V-0) | black |
| 2 | ground | phosphor bronze | copper/tin |
| 3 | cover | PE | |
| 4 | terminal | phosphor bronze | copper/tin |

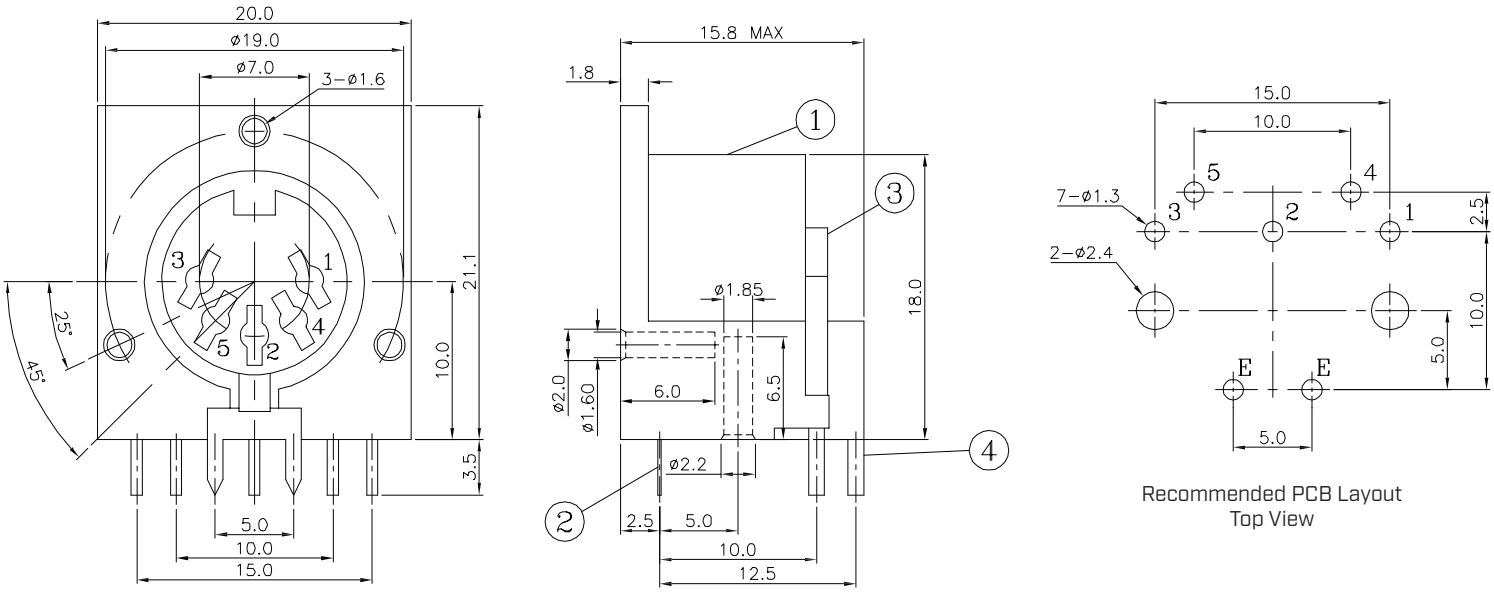


Recommended PCB Layout
Top View

## MECHANICAL DRAWING (SDS-60J)

units: mm
tolerance: ±0.3 mm
PCB tolerance: ±0.05 mm

| ITEM | DESCRIPTION | MATERIAL | PLATING/COLOR |
|---|---|---|---|
| 1 | housing | PBT (UL94V-0) | black |
| 2 | ground | phosphor bronze | copper/tin |
| 3 | cover | PF | yellow |
| 4 | terminal | phosphor bronze | copper/tin |

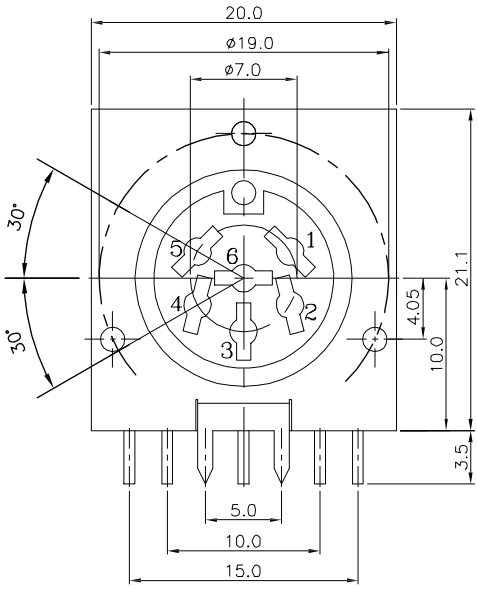


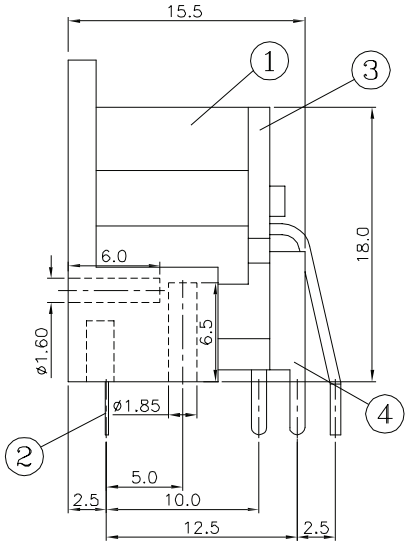


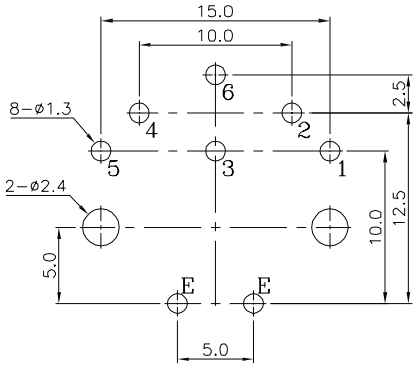


Recommended PCB Layout
Top View

## MECHANICAL DRAWING (SDS-70J)

units: mm
tolerance: ±0.3 mm
PCB tolerance: ±0.05 mm

| ITEM | DESCRIPTION | MATERIAL | PLATING/COLOR |
|---|---|---|---|
| 1 | housing | PBT (UL94V-0) | black |
| 2 | ground | phosphor bronze | silver |
| 3 | cover | PBT (UL94V-0) | black |
| 4 | terminal | phosphor bronze | silver |

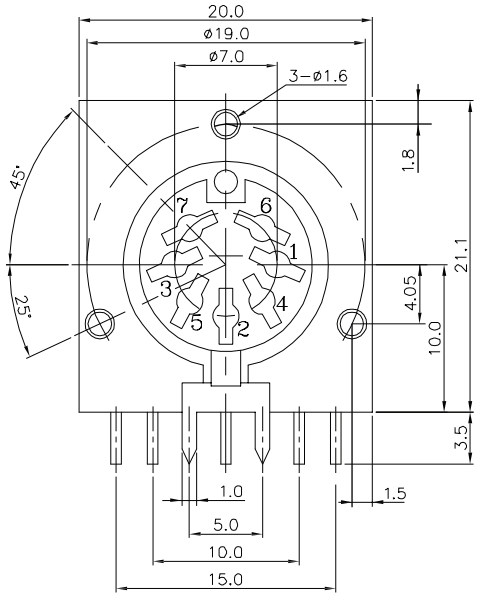


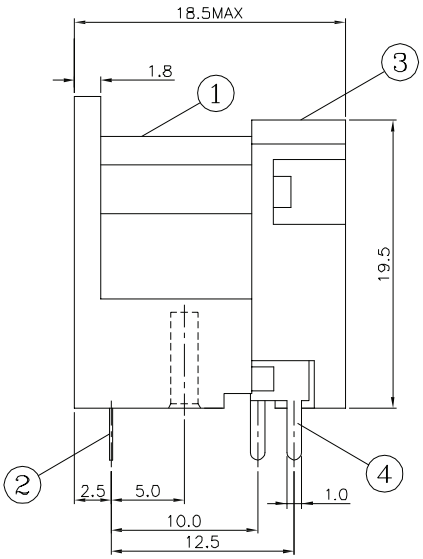


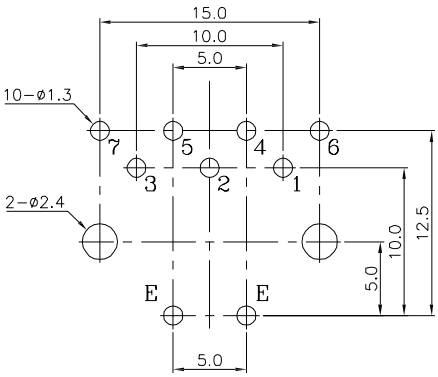


Recommended PCB Layout
Top View

## MECHANICAL DRAWING (SDS-80J)

units: mm
tolerance: ±0.3 mm
PCB tolerance: ±0.05 mm

| ITEM | DESCRIPTION | MATERIAL | PLATING/COLOR |
|---|---|---|---|
| 1 | housing | PBT (UL94V-0) | black |
| 2 | ground | phosphor bronze | copper/tin |
| 3 | cover | PBT (UL94V-0) | black |
| 4 | terminal | phosphor bronze | copper/tin |

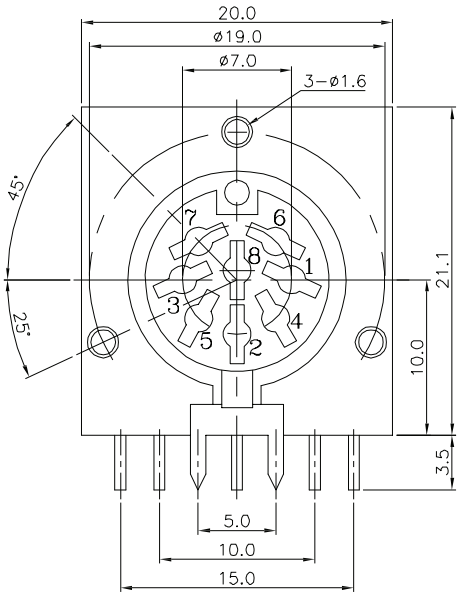


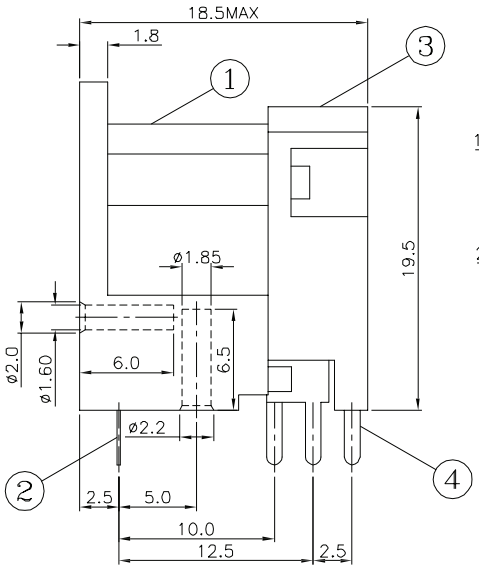


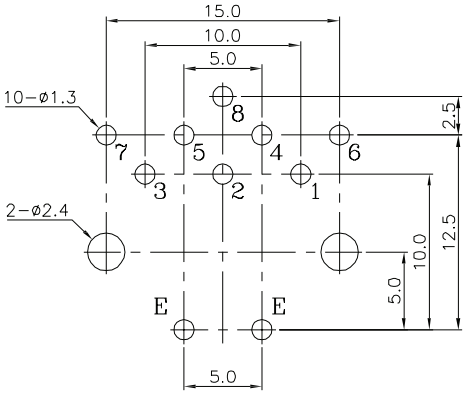


Recommended PCB Layout
Top View

## MECHANICAL DRAWING (SDD-130J)

units: mm
tolerance: ±0.3 mm
PCB tolerance: ±0.05 mm

| ITEM | DESCRIPTION | MATERIAL | PLATING/COLOR |
|---|---|---|---|
| 1 | terminal | phosphor bronze | silver |
| 2 | ground | phosphor bronze | silver |
| 3 | housing | PBT (UL94V-0) | black |
| 4 | cover | PBT (UL94V-0) | black |

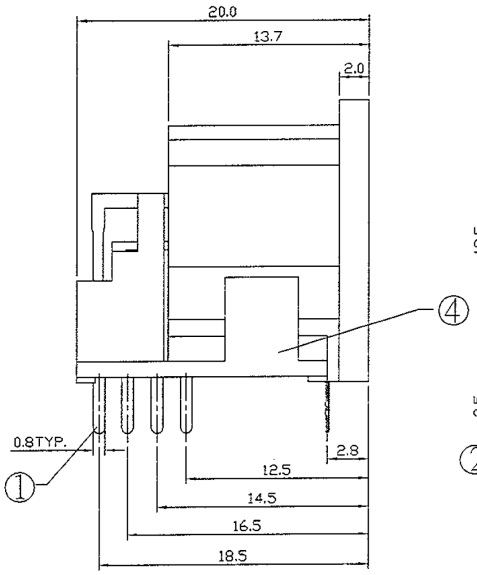


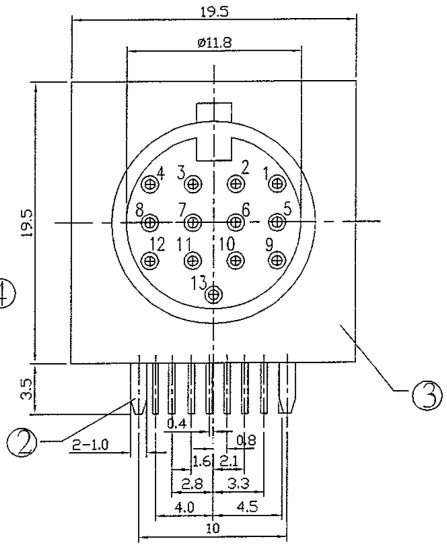


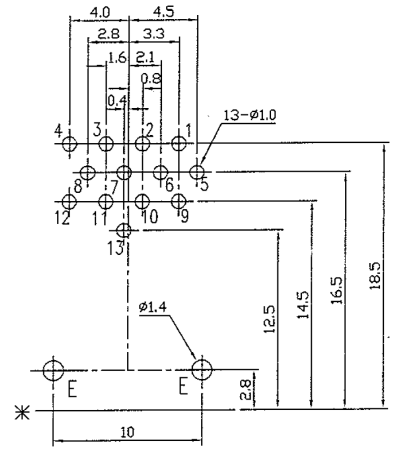


Recommended PCB Layout
Top View

## REVISION HISTORY

| rev. | description | date |
|---|---|---|
| 1.0 | initial release | 02/23/2006 |
| 1.01 | new template applied | 04/26/2012 |
| 1.02 | updated spec | 01/15/2014 |
| 1.03 | updated datasheet | 09/08/2017 |
| 1.04 | updated datasheet | 07/24/2018 |
| 1.05 | discontinued model SDS-30J, brand update | 10/08/2019 |
| 1.06 | updated housing | 02/13/2020 |
| 1.07 | logo, datasheet style update | 08/05/2022 |
| 1.08 | CUI Devices rebranded to Same Sky | 09/12/2024 |

The revision history provided is for informational purposes only and is believed to be accurate.

Same Sky offers a one (1) year limited warranty. Complete warranty information is listed on our website.

Same Sky reserves the right to make changes to the product at any time without notice. Information provided by Same Sky is believed to be accurate and reliable. However, no responsibility is assumed by Same Sky for its use, nor for any infringements of patents or other rights of third parties which may result from its use.

Same Sky products are not authorized or warranted for use as critical components in equipment that requires an extremely high level of reliability. A critical component is any component of a life support device or system whose failure to perform can be reasonably expected to cause the failure of the life support device or system, or to affect its safety or effectiveness.