SCT39XV-110-Y1R4A008JH

Aliases (UALCT39Y008JH0)

KEMET, SC39XV-Y, AC Line Filters, Common Mode, 0.476 mH, 30%

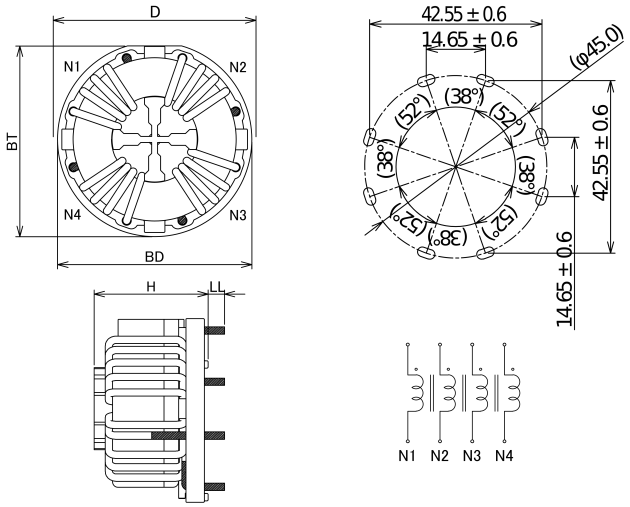

Click here for the 3D model.

General Information	
Series	SC39XV-Y
Style	Through-Hole
Features	High Impedance, High Rated Voltage
RoHS	Yes
Qualifications	AEC-Q200
Notes	Lead Spacing (S/S1) Are For Reference Only.
Miscellaneous	Temperature Rise Maximum: 50 K.
Core	Mn-Zn Ferrite

Specifications	
Voltage AC	1000 VAC
Voltage DC	1000 VDC
Inductance	0.476 mH (100 kHz)
Inductance Tolerance	30%
Current	11 A
Temperature Range	-40/+150°C
DC Resistance	5.87 mOhms

Dimensions	
D	53mm MAX
H	31mm +1/-0.6mm
LL	4.5mm +/-0.5mm
Wire Size	1.4mm
BD	51mm +/-0.5mm
BT	50mm +/-0.5mm

Packaging Specifications	
Packaging	Tray
Packaging Quantity	48
Typical Component Weight	100.4 g

Statements of suitability for certain applications are based on our knowledge of typical operating conditions for such applications, but are not intended to constitute - and we specifically disclaim - any warranty concerning suitability for a specific customer application or use. This Information is intended for use only by customers who have the requisite experience and capability to determine the correct products for their application. Any technical advice inferred from this Information or otherwise provided by us with reference to the use of our products is given gratis, and we assume no obligation or liability for the advice given or results obtained.

© 2006 - 2024 KEMET