© 2023 TE Connectivity. All Rights Reserved.

REVISIONS					
P	LTR	DESCRIPTION	DATE	DWN	APVD
	L	REV PER ECN-25-327647	27JUN2025	LP	RL

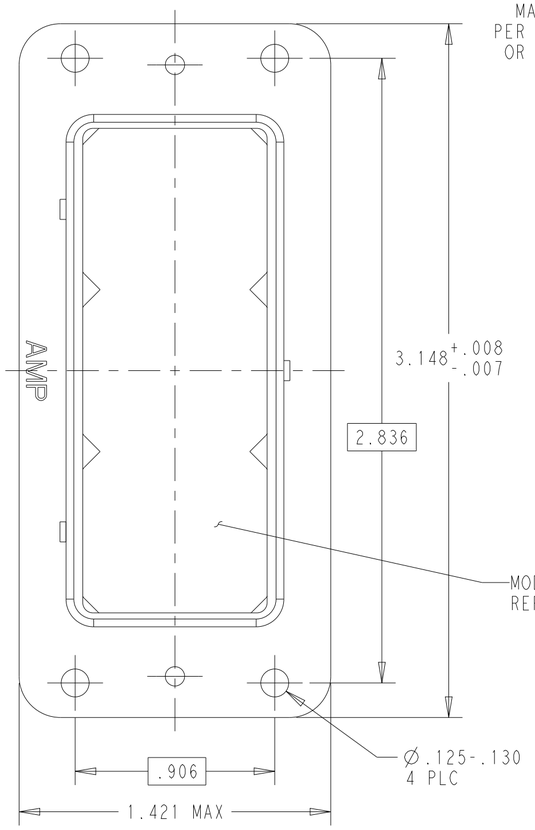

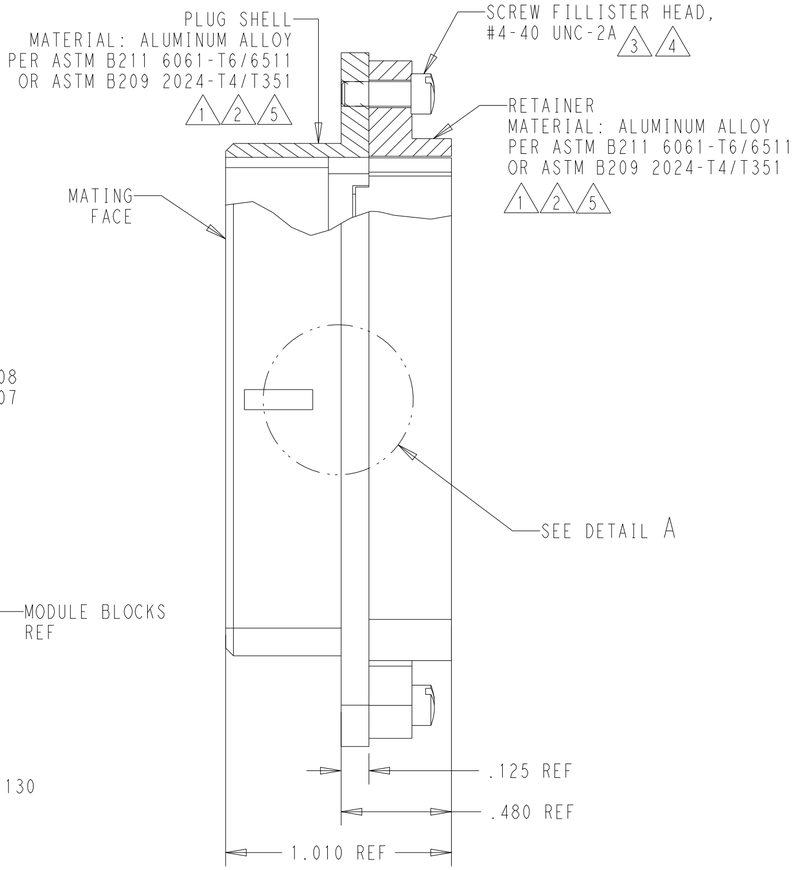

SECTION X-X
5-202795-1

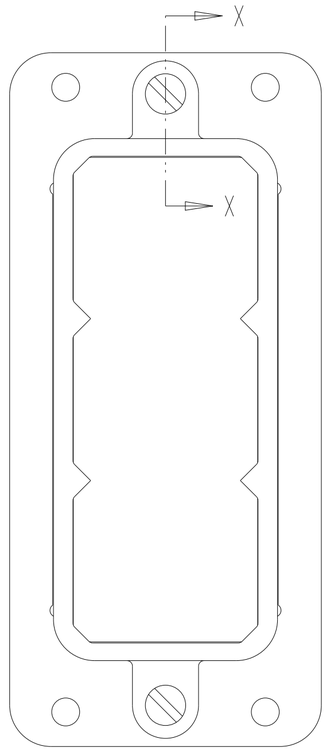

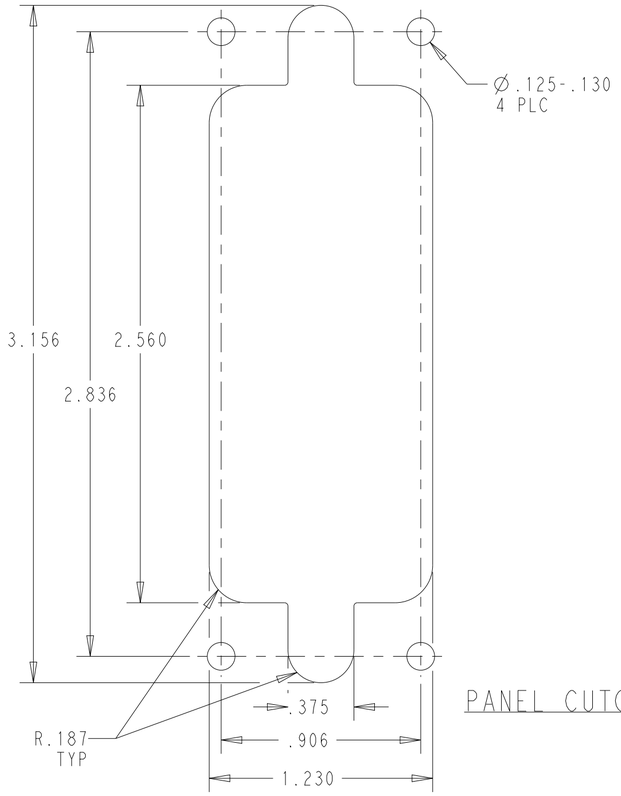

PANEL CUTOUT

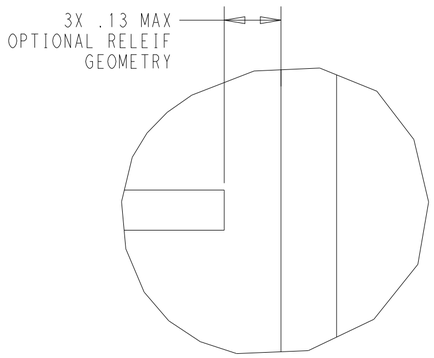

DETAIL A
SCALE 4:1

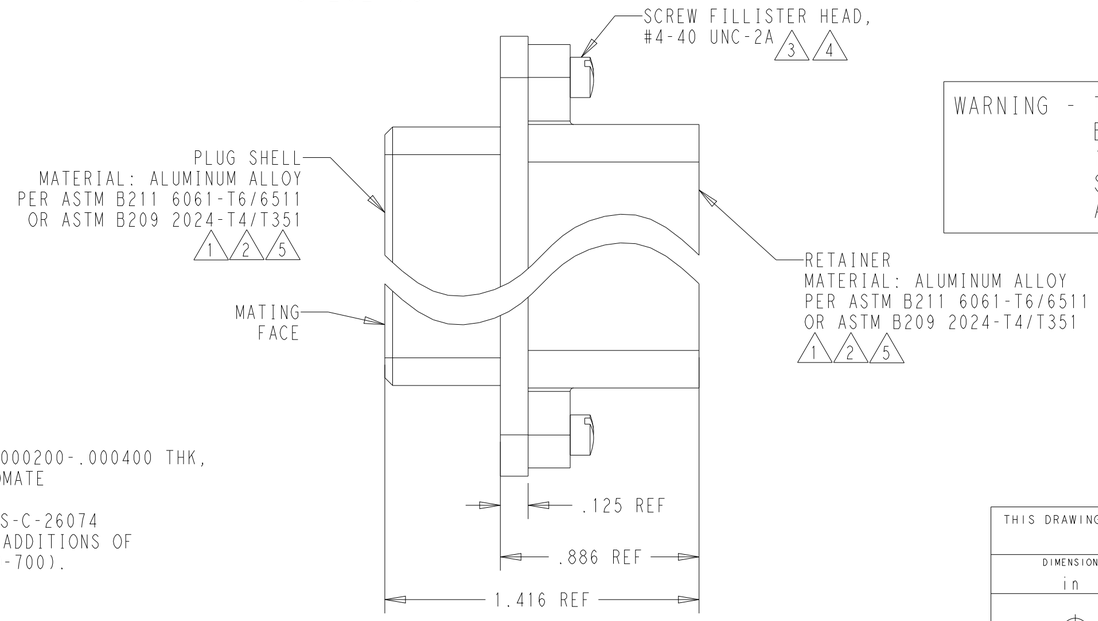

5-202795-2

NOTES:

1. ZINC PLATE PER ASTM-B-633 TYPE II, .000200-.000400 THK, CLASS 3 COLORLESS SUPPLEMENTARY CHROMATE
2. ELECTROLESS NICKELL PLATE PER SAE-AMS-C-26074 .000400-.000800 THK (NO INTENTIONAL ADDITIONS OF LEAD OR CADMIUM PER DFE STANDARD 230-700).
3. ZINC PLATED COLD ROLLED STEEL
4. PASSIVATE STAINLESS STEEL
5. CADMIUM PLATE PER QQ-P-416, .000200-.000400 THK.

WARNING - THIS DOCUMENT CONTAINS TECHNOLOGY WHOSE EXPORT IS RESTRICTED BY THE EXPORT ADMINISTRATION REGULATIONS ("EAR") PURSUANT TO 15 C.F.R. PARTS 730-774. VIOLATIONS OF THE EAR ARE SUBJECT TO SEVERE CRIMINAL PENALTIES UNDER THE EXPORT CONTROL REFORM ACT, AS AMENDED (TITLE 50, U.S.C., SEC. 4801, ET SEQ.).

	2 4	FOR PINS	5-202795-2
	2 4	FOR SOCKETS	5-202795-1
OBSOLETE	1 5	FOR SOCKETS	202795-4
OBSOLETE	1 3	FOR PINS	202795-3
SUPERSEDED BY 5-202287-2	1 3	FOR PINS	202795-2
SUPERSEDED BY 5-202287-1	1 3	FOR SOCKETS	202795-1
COMMENTS	FINISH	ASST TYPE	ASSEMBLY NUMBER

THIS DRAWING IS A CONTROLLED DOCUMENT.

DIMENSIONS: in

TOLERANCES UNLESS OTHERWISE SPECIFIED:
0 PLC ±-
1 PLC ±-
2 PLC ±-
3 PLC ±.005
4 PLC ±.0005
ANGLES ±0.5

MATERIAL: SEE CALLOUTS -

FINISH: - -

DWN L. PROSPERI 06JUN2023
CHK R. LACUESTA 06JUN2023
APVD R. LACUESTA 06JUN2023
PRODUCT SPEC -
APPLICATION SPEC -
WEIGHT -

TE Connectivity

NAME PLUG ASSEMBLY, MODULE, SERIES G -

SIZE A2 | CAGE CODE 00779 | DRAWING NO C-202795 | RESTRICTED TO -

CUSTOMER DRAWING | SCALE 1:1 | SHEET 1 OF 1 | REV L