molex

APPLICATION SPECIFICATION

SQUBA 3.6

INTERCONNECT SYSTEMS





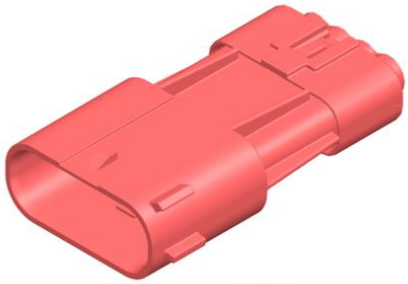

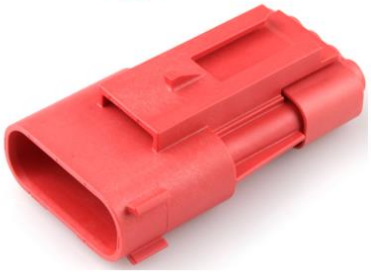


REVISION:	ECM INFORMATION:	TITLE:	SHEET No.
C4	EC No: 760095 DATE: 23/08/18	APPLICATION SPECIFICATION SQUBA 3.6 INTERCONNECT SYSTEM	1 of 18

DOCUMENT NUMBER:	DOC TYPE:	DOC PART:	CREATED / REVISED BY:	CHECKED BY:	APPROVED BY:
2077760000-AS	PS	000	GOOLAM	GOOLAM	MRAMAKRISHNA

1.0 SCOPE

This Application Specification covers the application and end-usage requirements for the Squba 3.6 Sealed Wire-To-Wire, 3.60mm pitch single row connector series which uses copper terminals with tin plated contact interface terminated with 16, 18 and 20 AWG wire using Molex crimp technology. The mated system meets IP68 requirements.

2.0 PRODUCT DESCRIPTION

2.1 NAMES AND SERIES NUMBER(S)

DESCRIPTION	SERIES NUMBER
Squba 3.6, Receptacle Crimp Terminal	207777
Squba 3.6, Plug Crimp Terminal	207776
Squba 3.6, Receptacle assembly	207782
Squba 3.6, Receptacle assembly with Key/Colors	
Squba 3.6, Plug assembly	207778
Squba 3.6, Plug assembly with Key/Colors	
Squba 3.6, Plug assembly with Key/Colors and Clip slot	
Squba Plug Weather Cap	220423
Squba Receptacle Weather Cap	220424

2.2 DIMENSIONS, MATERIALS, PLATINGS AND MARKINGS

See the appropriate sales drawings for the information on dimensions, materials, plating's, and markings.

3.0 APPLICABLE DOCUMENTS AND SPECIFICATIONS

Product Specification…… 2077760000-PS
Receptacle Assembly sales drawing…… 2077820000-SD
Plug Assembly sales drawing…… 2077780000-SD
Receptacle Crimp Terminal sales drawing…… 2077770000-SD
Plug Crimp Terminal sales drawing…… 2077760000-SD
Plug weather Cap sales drawing……2204230000-SD
Receptacle Weather Cap sales drawing……2204240000-SD
Test Summary…… 2077760000-TS
Receptacle Assembly Packaging Specification…… 2077820000-PK
Plug Assembly Packaging Specification…… 2077780000-PK
Receptacle Crimp Terminal Packaging Specification…… 2077770000-PK
Plug Crimp Terminal Packaging Specification…… 2077760000-PK
Plug weather Cap Packaging Specification ……2204230000-PK
Receptacle Weather Cap Packaging Specification ……2204240000-PK
Applicator Tool Crimp Specification…… Refer table under section 4.2
Hand Tool Crimp Specification…… Refer table under section 4.2

4.0 PRODUCT DEFINITION

4.1 CONNECTOR ASSEMBLIES

(4 CKT CONNECTORS SHOWN)

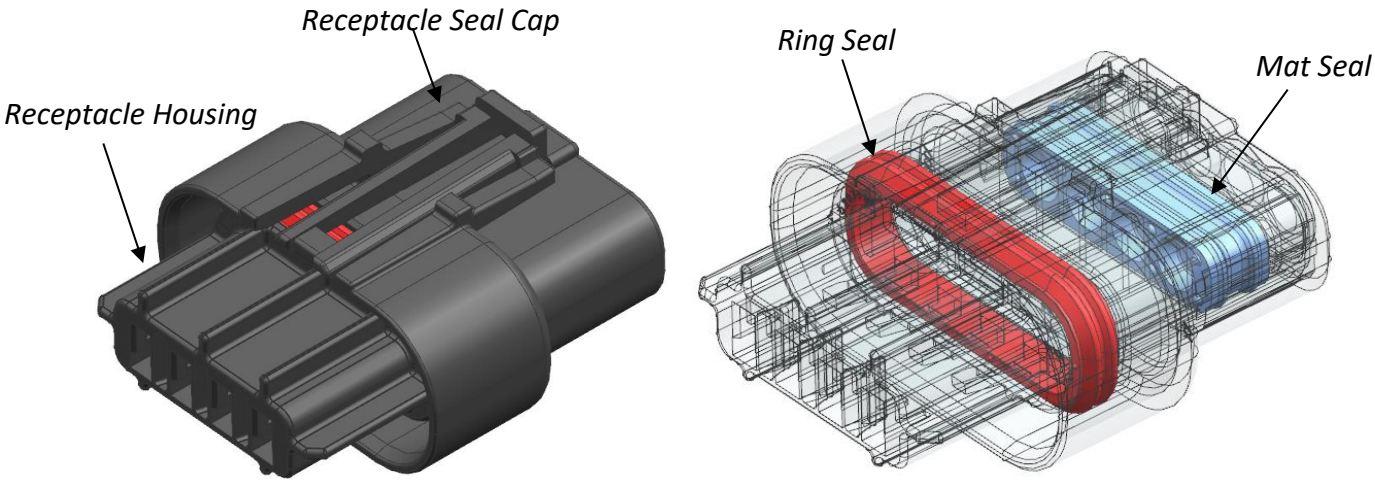

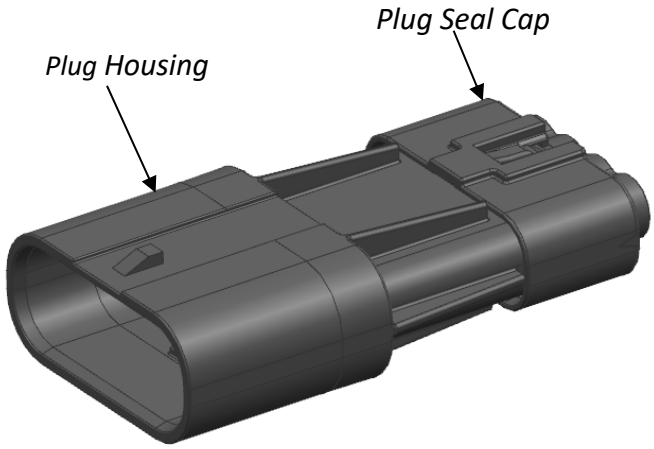

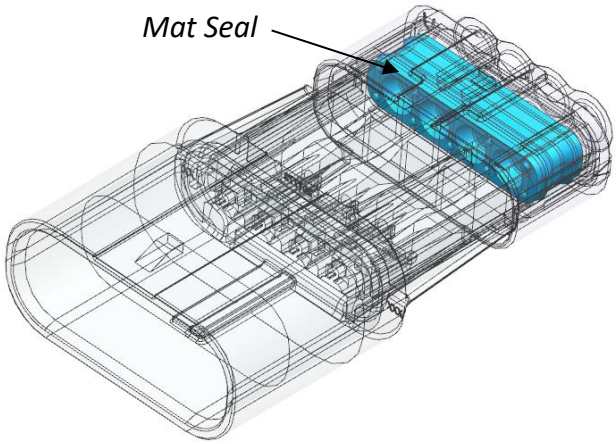

4.2 CRIMP TERMINALS

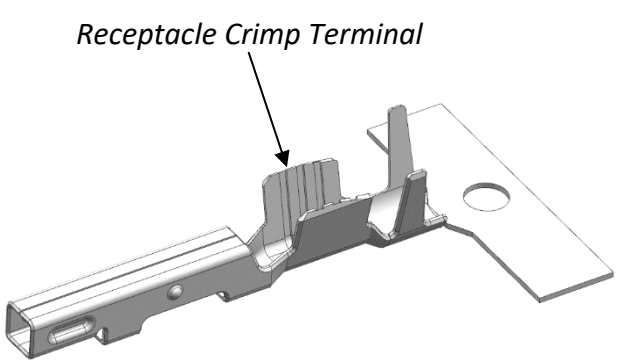

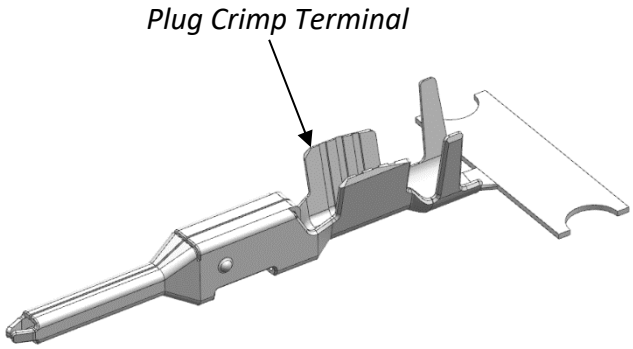

Crimp Tools	Description	Wire Style	Order Number	Crimp Spec Document Number
Crimp Hand Tools	16 AWG Male & Female Terminal	UL 1007/1061	2133090000	2133090000
	18 AWG Male & Female Terminal	UL 1007/1061	2133090100	2133090100
	20 AWG Male & Female Terminal	UL 1007/1061	2133090200	2133090200
	18 AWG Male & Female Terminal	UL 1015/1230	TBD	TBD
	20 AWG Male & Female Terminal	UL 1015/1230	TBD	TBD
Crimp Applicators	16 AWG Female Terminal	UL 1007/1061	2130690600	2130690600
	16 AWG Male Terminal	UL 1007/1061	2130690700	2130690700
	18-20 AWG Female Terminal	UL 1007/1061	2130690800	2130690800
	18-20 AWG Male Terminal	UL 1007/1061	2130690900	2130690900
	18-20 AWG Female Terminal	UL 1015/1230	2130695000	2130695000
	18-20 AWG Male Terminal	UL 1015/1230	2130694900	2130694900

Crimp Applicator

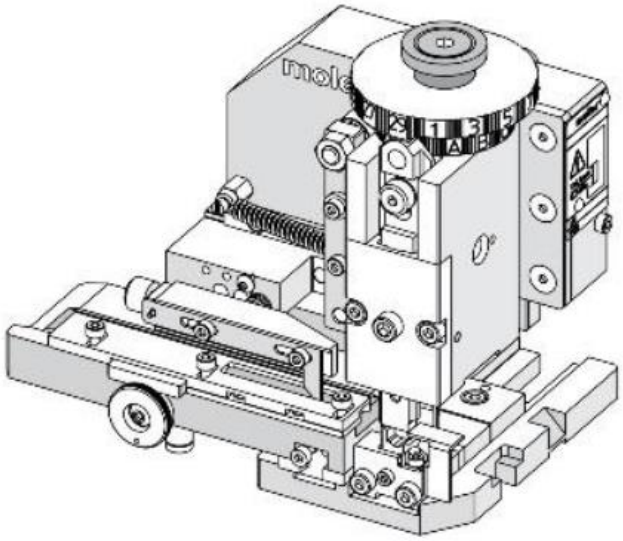

Hand Tool

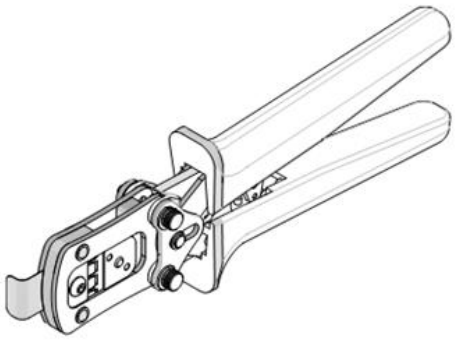

4.3 WEATHER CAPS

Plug Weather Cap



Receptacle weather cap

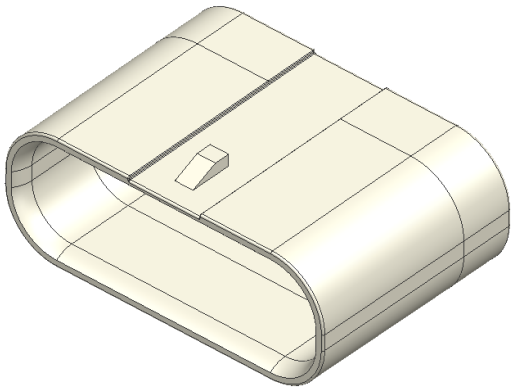

5.0 TERMINAL ORIENTATION DURING INSERTION INTO HOUSING

Terminals are to be inserted in the housings as shown below on sheet 5-8. Notice the orientation of the terminal body relative to the receptacle thumb latch and plug thumb latch hook. Notice the orientation of the terminal body relative to the "U" marking in the housings. Do not force terminals into the housing cavity. The terminal and housing are designed with silicon seals and other features that will provide some light resistance during insertion as well as retention after insertion but if excessive resistance is felt during insertion pull terminal back out and double check that the terminal orientation per sheets 5-8. Terminals are to be inserted until they are fully seated and audible click is heard. The housing provides a stopping surface and the housing lock finger provides terminal retention and a light audible click to indicate a fully inserted terminal. You can use the PUSH → CLICK → PULL method (sheet 10) during terminal insertion to ensure fully seated terminal.

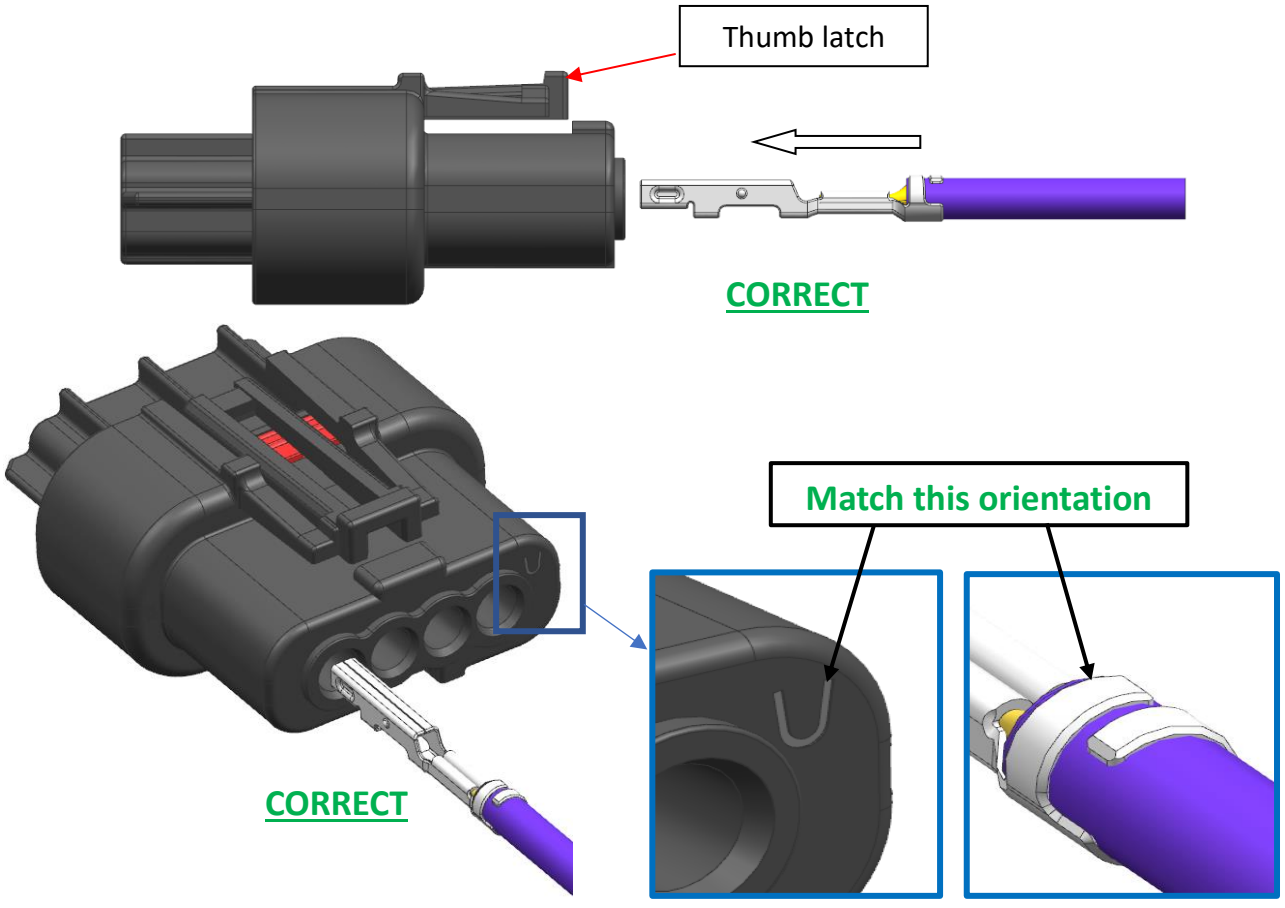

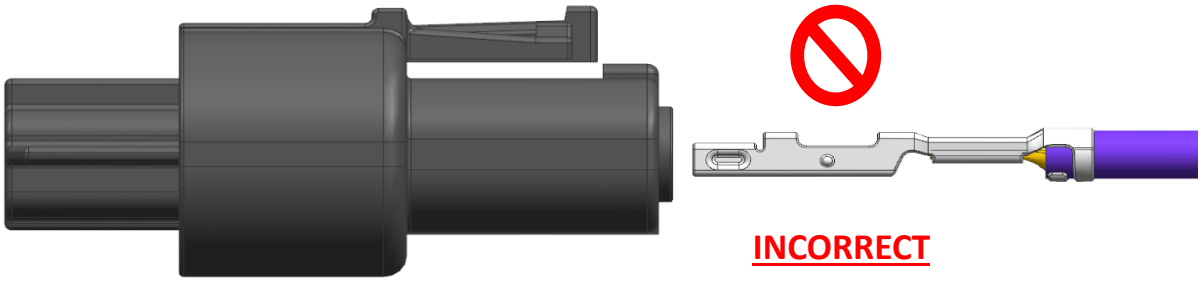

INCORRECT

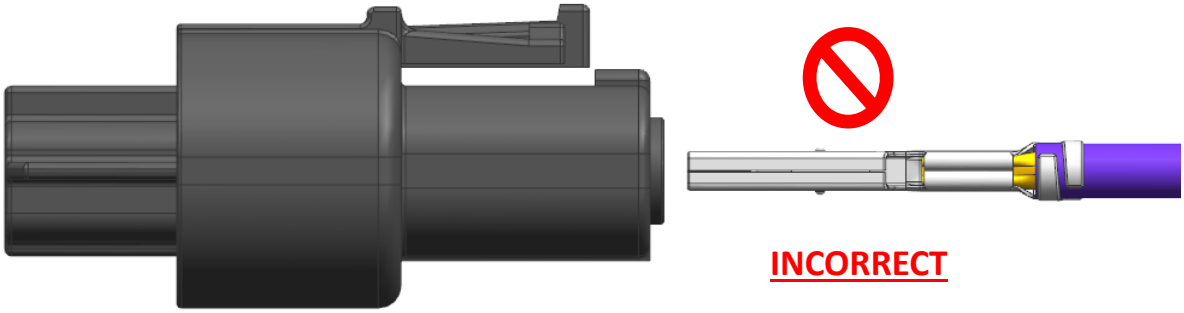

INCORRECT

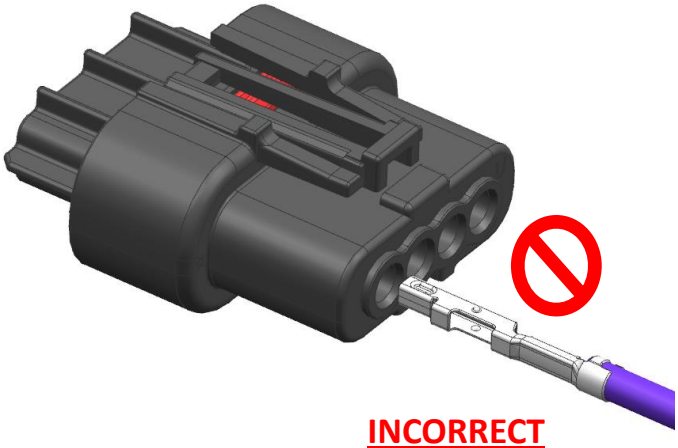

INCORRECT

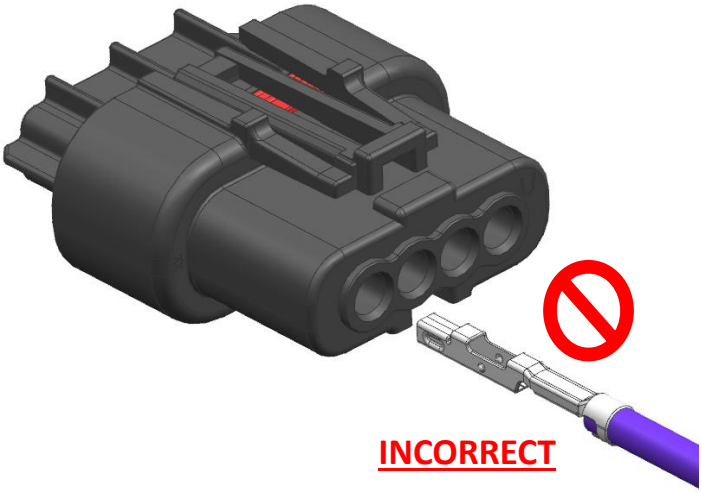

INCORRECT

REVISION:	ECM INFORMATION:	TITLE:	SHEET No.
C4	EC No: 760095 DATE: 23/08/18	APPLICATION SPECIFICATION SQUBA 3.6 INTERCONNECT SYSTEM	7 of 18

DOCUMENT NUMBER:	DOC TYPE:	DOC PART:	CREATED / REVISED BY:	CHECKED BY:	APPROVED BY:
2077760000-AS	PS	000	GOOLAM	GOOLAM	MRAMAKRISHNA

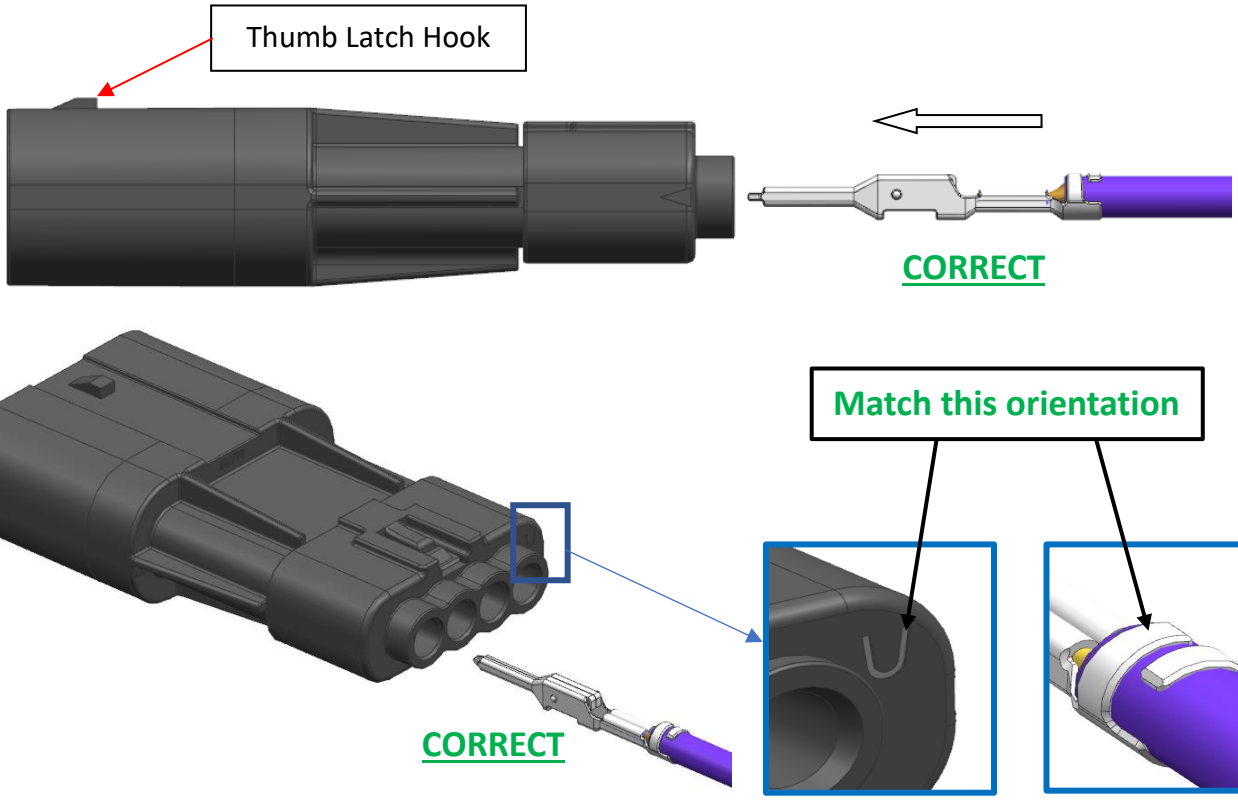

INSERTION SKEW

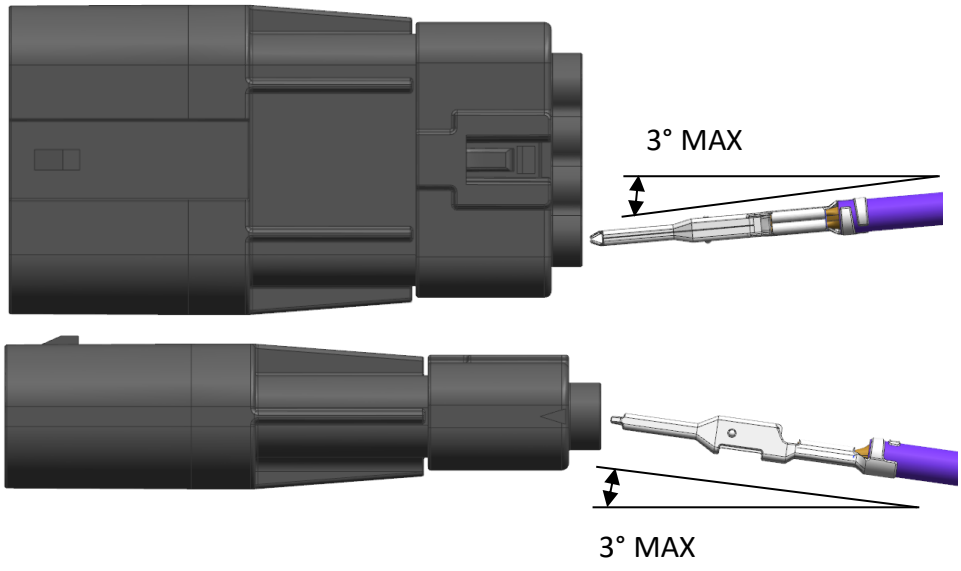

REVISION:	ECM INFORMATION:	TITLE:	SHEET No.
C4	EC No: 760095 DATE: 23/08/18	APPLICATION SPECIFICATION SQUBA 3.6 INTERCONNECT SYSTEM	8 of 18

DOCUMENT NUMBER:	DOC TYPE:	DOC PART:	CREATED / REVISED BY:	CHECKED BY:	APPROVED BY:
2077760000-AS	PS	000	GOOLAM	GOOLAM	MRAMAKRISHNA

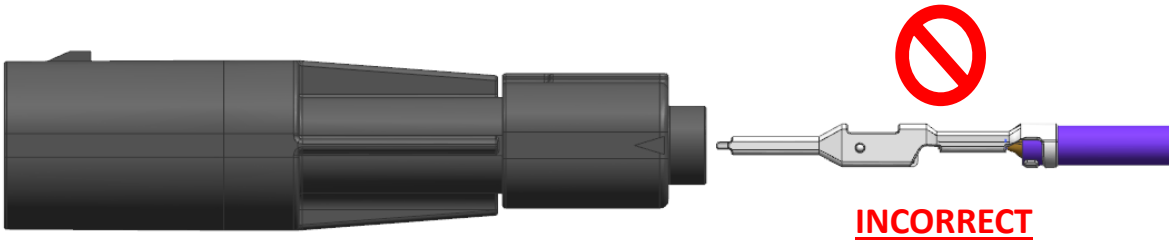

INCORRECT

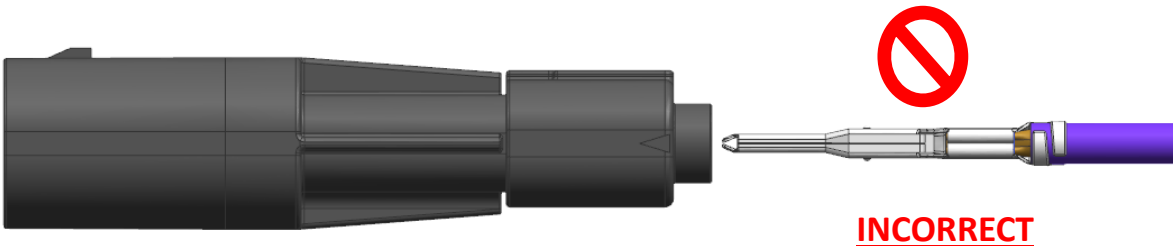

INCORRECT

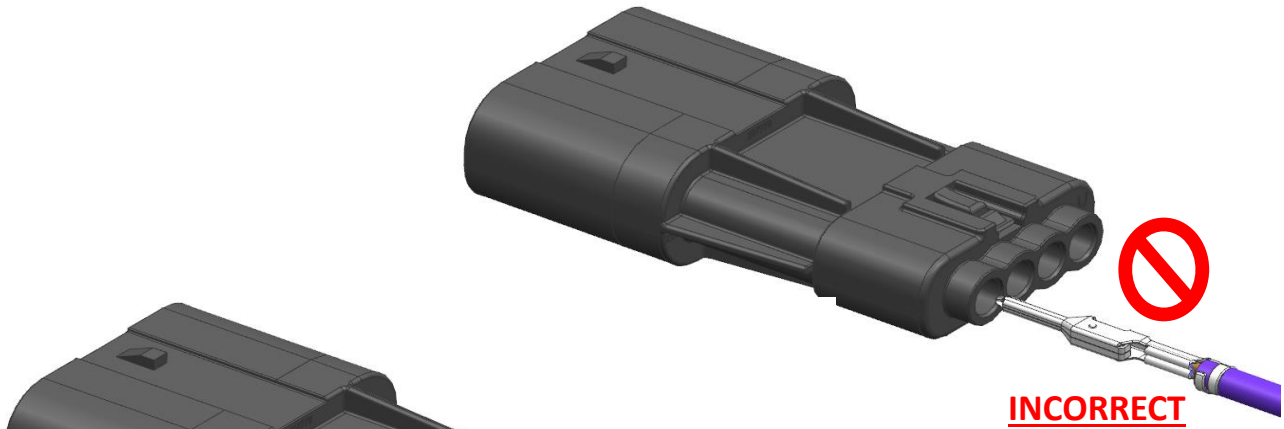

INCORRECT

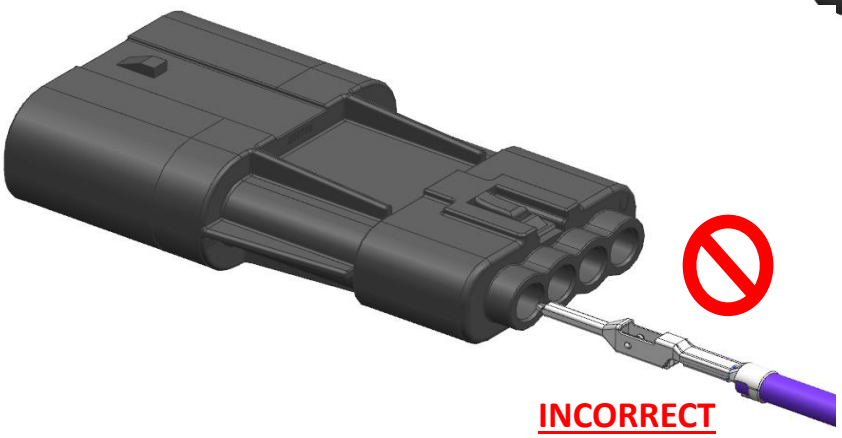

INCORRECT

REVISION:	ECM INFORMATION:	TITLE:	SHEET No.
C4	EC No: 760095 DATE: 23/08/18	APPLICATION SPECIFICATION SQUBA 3.6 INTERCONNECT SYSTEM	9 of 18

DOCUMENT NUMBER:	DOC TYPE:	DOC PART:	CREATED / REVISED BY:	CHECKED BY:	APPROVED BY:
2077760000-AS	PS	000	GOOLAM	GOOLAM	MRAMAKRISHNA

CARE MUST BE TAKEN WHEN HANDLING THE TERMINAL PINS.

DO NOT USE OR TRY TO ATTEMPT TO REWORK BENT OR DAMAGED TERMINAL PINS

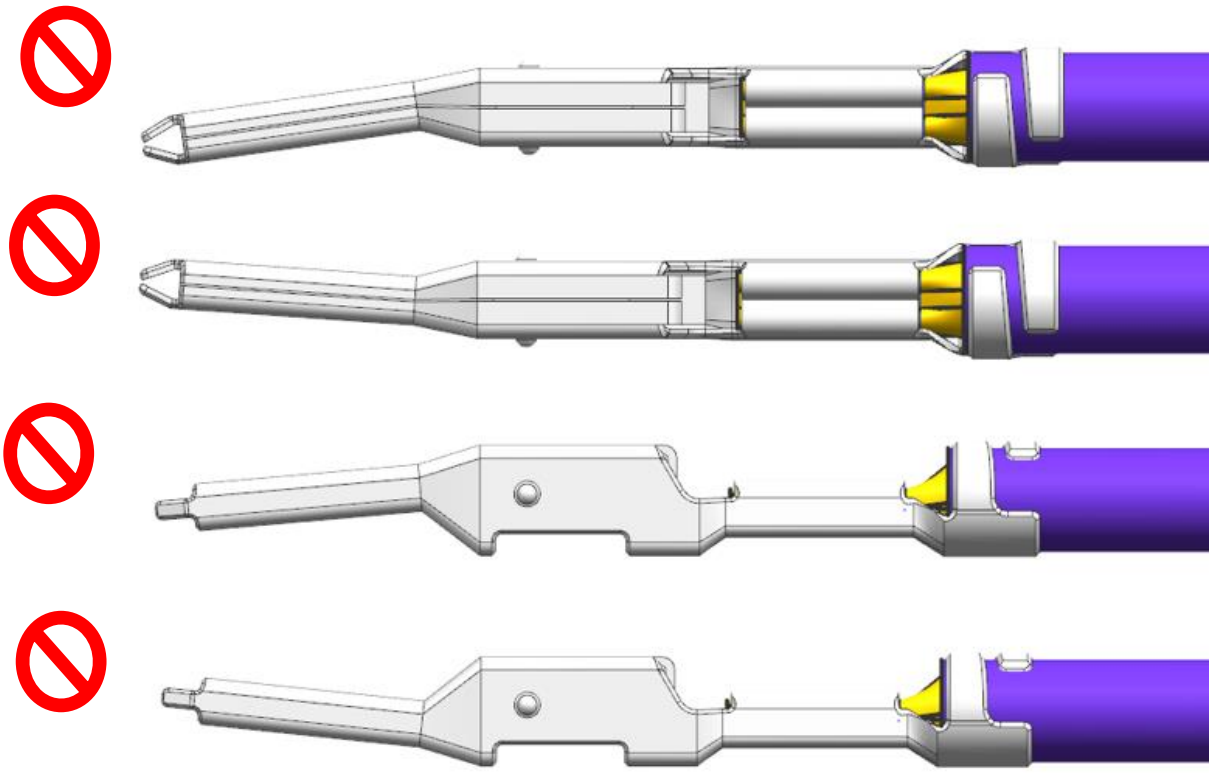

PUSH → CLICK → PULL

(APPLIES TO BOTH RECEPTACLE AND PLUG)

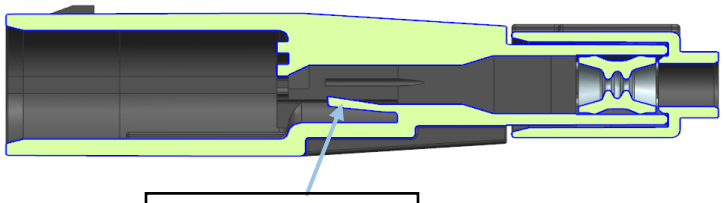

HOUSING LOCK

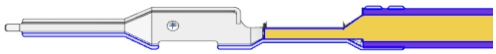

PUSH (INSERT TERMINAL)

SLIGHT RESISTANCE WILL BE FELT AS TERMINAL PUSHES THROUGH THE SEAL THEN AGAIN AS THE TERMINAL ENGAGES THE HOUSING LOCK.

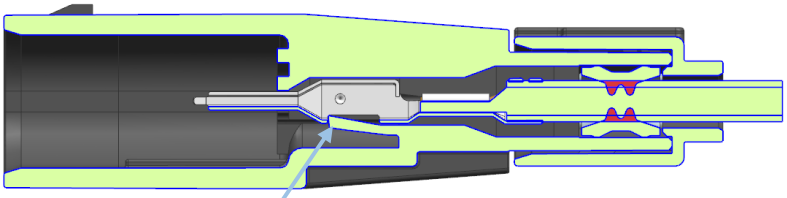

CLICK (LISTEN FOR AUDIBLE CLICK)

AUDIBLE CLICK IS HEARD AFTER TERMINAL ENGAGES THE HOUSING LOCK

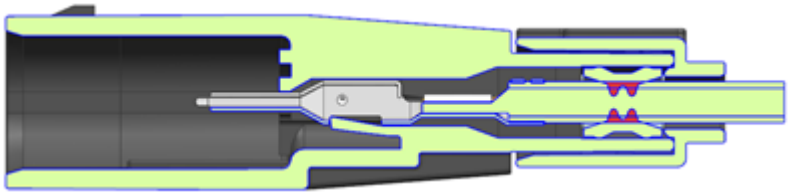

PULL (GENTLY PULL ON WIRE)

PULL GENTLY ON WIRE TO ENSURE TERMINAL IS FULLY SEATED AND SECURED BY HOUSING LOCK.



FULLY SEATED

MATING SIDE VIEW

REVISION:	ECM INFORMATION:	TITLE:	SHEET No.
C4	EC No: 760095 DATE: 23/08/18	APPLICATION SPECIFICATION SQUBA 3.6 INTERCONNECT SYSTEM	11 of 18

DOCUMENT NUMBER:	DOC TYPE:	DOC PART:	CREATED / REVISED BY:	CHECKED BY:	APPROVED BY:
2077760000-AS	PS	000	GOOLAM	GOOLAM	MRAMAKRISHNA

Squba 3.6 Accepts Multiple wire styles. Refer Product sales drawings for compatible part identification. This can be broadly Classified as thin insulation (UL1007,1061 or equivalent) and thick insulation wire styles (UL1015, 1230 or equivalent). Following are the compatible terminals.

Plug Terminal	Receptacle terminal	AWG- Wire Style
2077760001	2077770001	16 AWG – UL1007/1061 (thin)
2077760002	2077770002	18-20 AWG – UL1007/1061 (thin)
2077760003	2077770003	18-20AWG – UL1015/1230 (thick)

However, if desired, any combination of plug and receptacle terminals can be mated, based on application.

For Housing details, Refer 2077780000-SD, and 2077820000-SD.

To identify the wire style compatible housings, view the color of the mat seal from the terminal cavity.

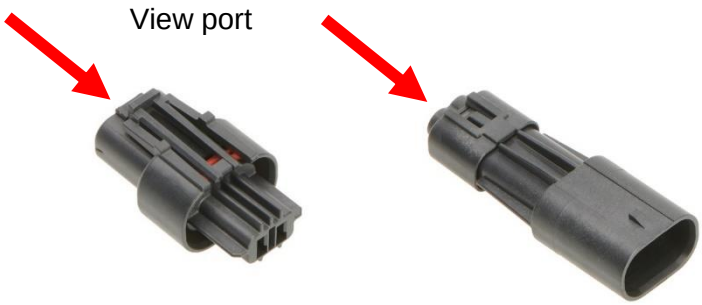

Mat Seal color	Image	Wire Style
Light Blue		UL1007/1061 or Equivalent
Rust Red	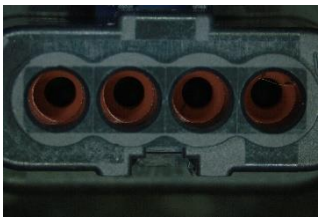	UL1015/1230 or Equivalent

Do not use wrong wire style as it will compromise the IP rating integrity of the connector system. Refer sales drawing for more details.

6.0 MATING AND UN-MATING

6.1 CONNECTORS

This product contains a polarization feature to ensure proper orientation during mating. This rib feature is shown below. When mated in the improper orientation this rib feature will not allow the product to be mated.

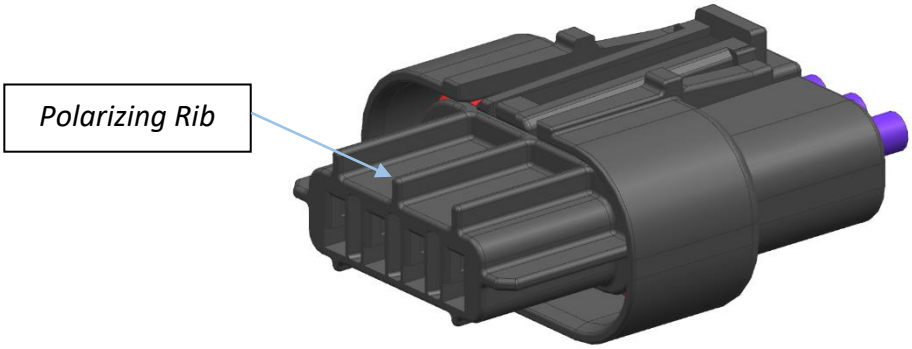

This product also contains a positive locking thumb latch and corresponding latch hook to ensure full mating and prevent accidental un-mating during normal operation. This thumb latch and latch hook features and full mating of the connectors occurs when and after the thumb latch is fully engaged and locked as shown below. A light audible click is heard to indicate fully mated connectors.

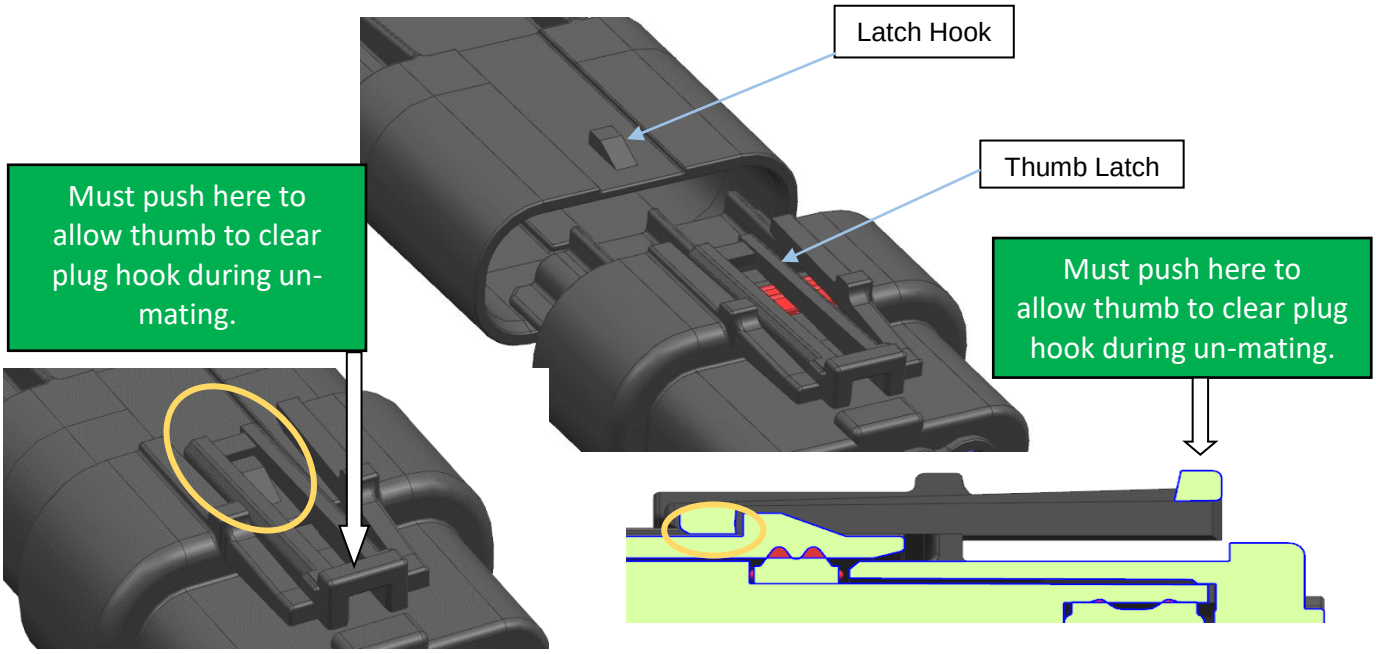

7.0 PLUG WITH CLIP SLOT AND CLIP

This product contains a Clip slot Feature which is compatible with USCAR-2 Compliant EWCAP-005-7; 7mm Standard Clip slot and Mates with all 7mm Clips intended to mate with interface provided in EWCAP-005 Rev D.

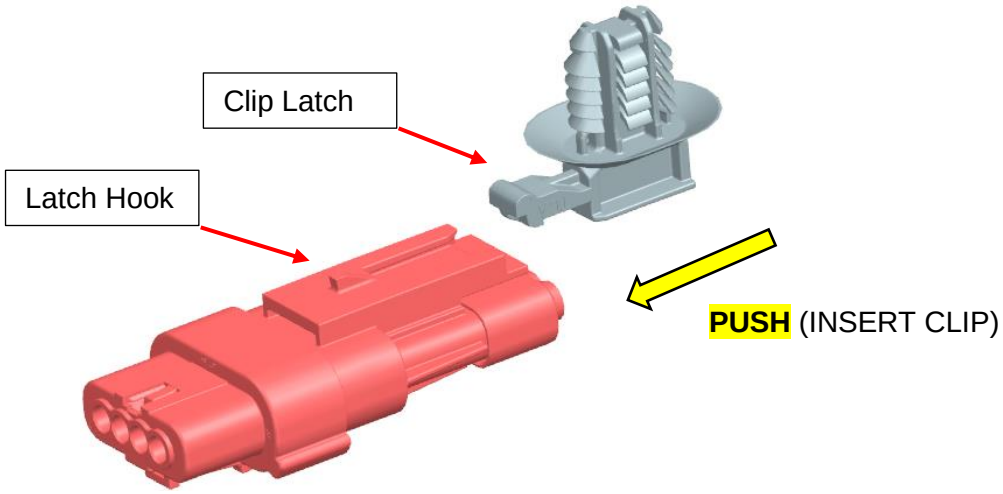

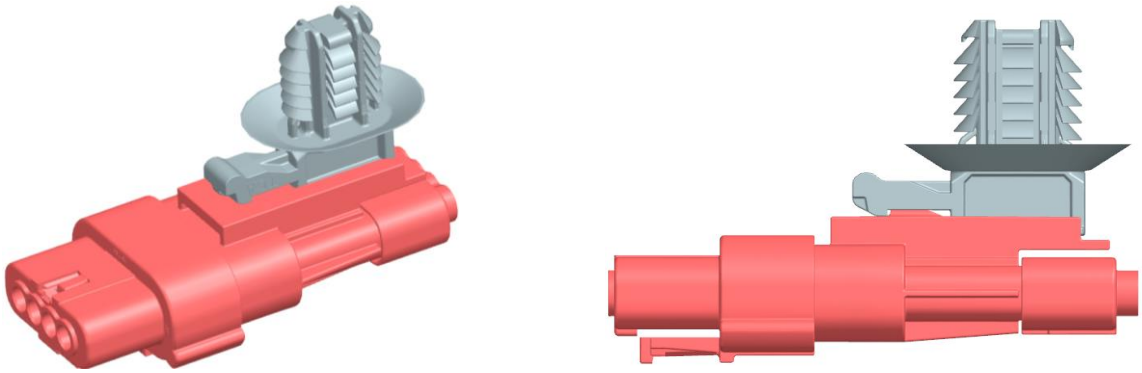

CLICK (LISTEN FOR AUDIBLE CLICK)

NOTE: CLIP USED IN PICTURES FOR REPRESENTATIONAL PURPOSE ONLY. MOLEX RECOMMENDS USING CLIPS WHICH ARE INTENTED TO BE USED WITH EWCAP- 005 7MM CLIP SLOT

8.0 POLARIZATION FEATURE - KEY/COLORS

8.1 PLUG KEY CONFIGURATIONS

KEY A, RED COLOR

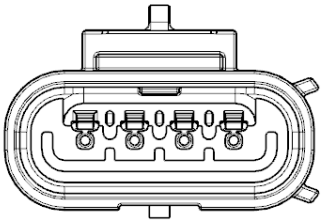

KEY B, NATURAL COLOR

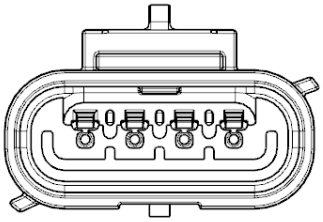

KEY C, GRAY COLOR

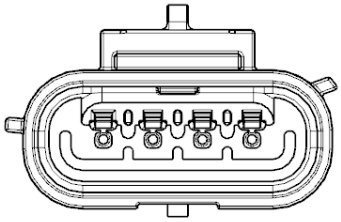

KEY D, YELLOW COLOR

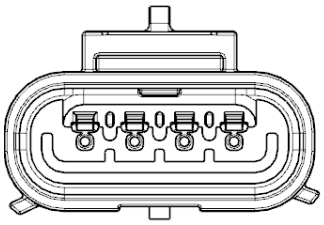

KEY E, BROWN COLOR

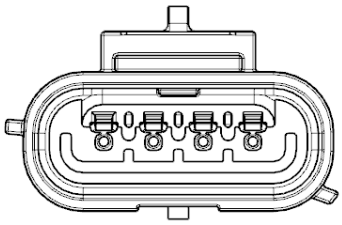

KEY F, ORANGE COLOR

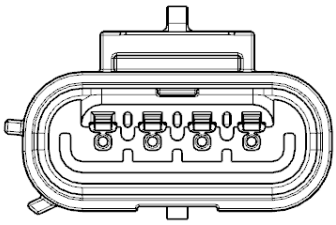

8.2 RECEPTACLE KEY CONFIGURATIONS

KEY A, RED COLOR

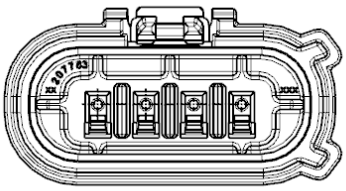

KEY B, NATURAL COLOR

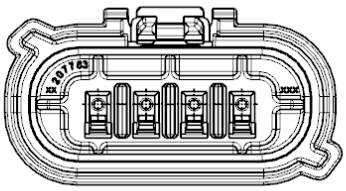

KEY C, GRAY COLOR

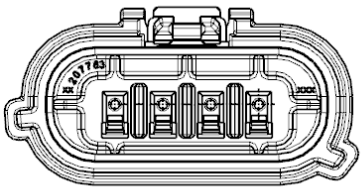

KEY D, YELLOW COLOR

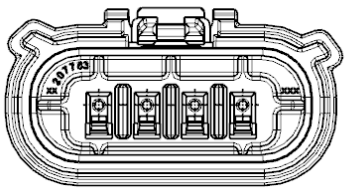

KEY E, BROWN COLOR

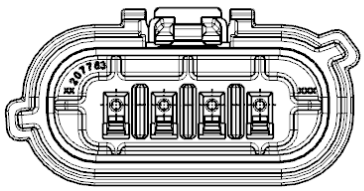

KEY F, ORANGE COLOR

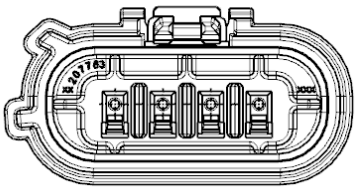

8.3 RIGHT POLARIZATION IN MATED CONDITIONS

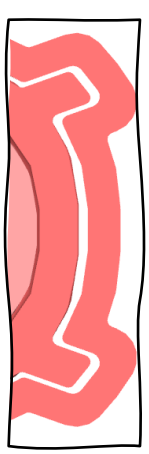

CORRECT

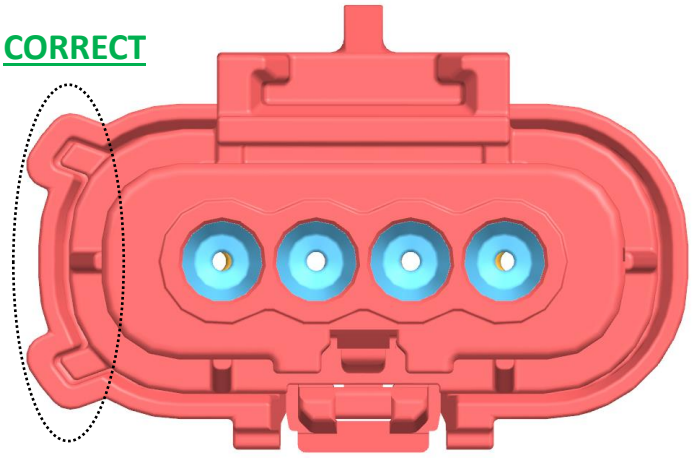

Assembled appropriate key/colored Plug and Receptacle Assembly.

8.4 WRONG POLARIZATION IN MATED CONDITION

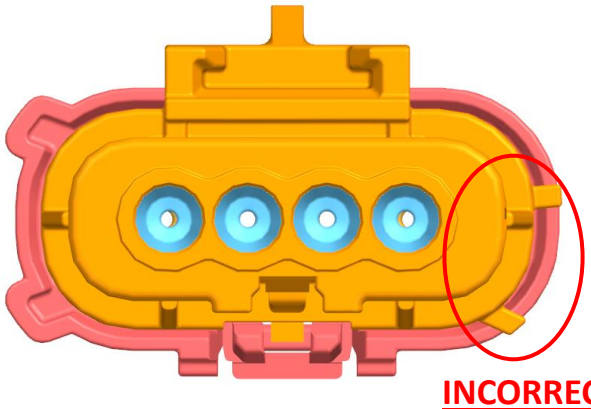

INCORRECT

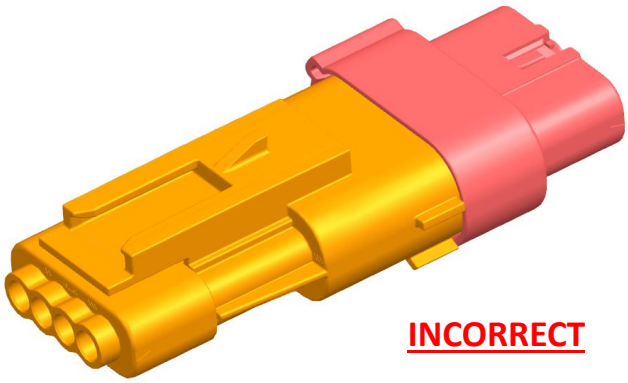

INCORRECT

Note: Plug and Receptacle Assembly stubs and do not mate due to incorrect keying. Use appropriate key/colored parts. Do not attempt to insert plugs and receptacles with the wrong polarizations by applying excessive force, as it will damage the parts and compromise the product's functionality. Both the plug and receptacle should have the same color/polarization

6.2 WEATHER CAPS

Plug Weather Caps are to be inserted in the Plug housings as shown below. Notice the orientation of the Cap with the plug Housing.



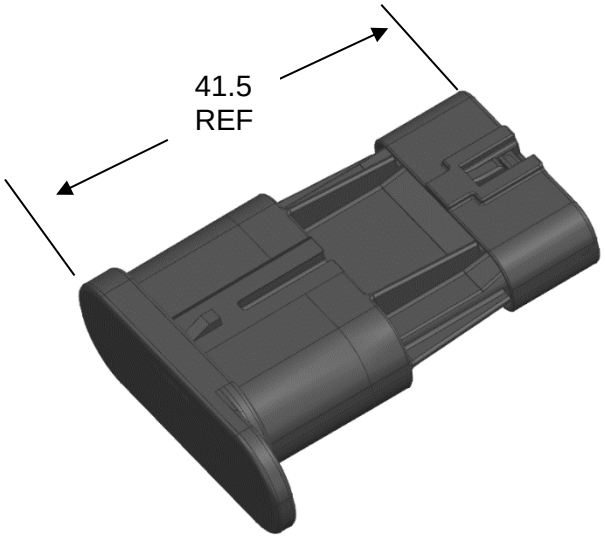

Receptacle weather cap can be mated to receptacle which a positive locking thumb latch and corresponding latch hook to ensure full mating and prevent accidental un-mating during normal operation. This thumb latch and latch hook features and full mating of the assembly occurs when and after the thumb latch is fully engaged and locked as shown below. A light audible click is heard to indicate fully mated.

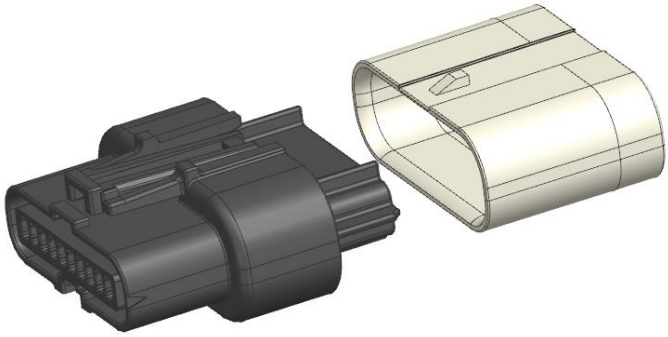

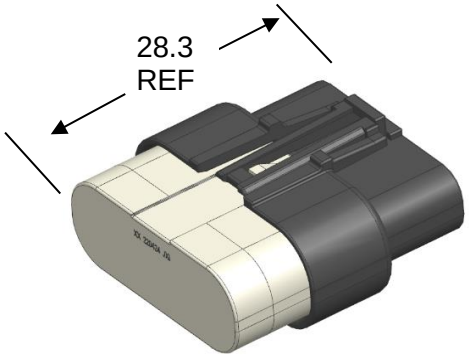

7.0 PACKAGING

Parts shall be packaged to protect against damage during handling, transit and storage. See packaging specifications listed in section 3.0 (sheet 2).

8.0 OTHER INFORMATION

8.1 CABLE TIE AND OR WIRE TWIST LOCATION

CKT Size	Dim T Min.
2	50.8 mm (2.00")
3	50.8 mm (2.00")
4	76.2 mm (3.00")

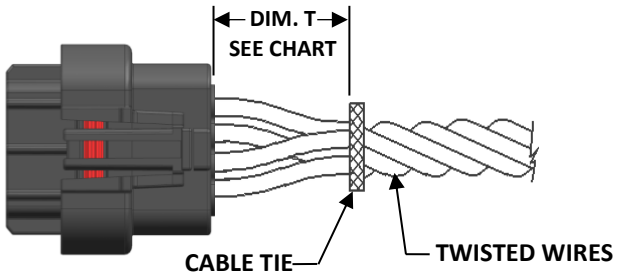

The "T" dimension defines a "free" length of wire, or a length of wire that is not subject to significant bias by external factors such as a wire tie, wire twisting, or other means of bending or deforming of the wires that repositions them from their natural relaxed state or location where they enter the housing. Wires are to be dressed in such a manner to allow the terminals to float freely in the pocket. This dimension is a general recommendation and may need to be adjusted for different wire gauges and wire type and insulation thickness and insulation material.