Automotive Power MOSFET Module

NXV08H300DT1

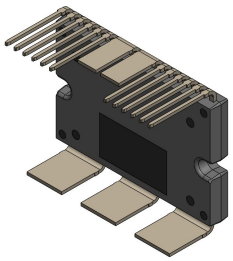

APM17−MDC
CASE MODHH

Features

- 2 Phase MOSFET Module
  At Customer Side this Module Can Be Used as 1/2 Bridge MOSFET Module by Combining 2 Phase Out Power Terminals
- Electrically Isolated DBC Substrate for Low Rthjc
- Compact Design for Low Total Module Resistance
- Module Serialization for Full Traceability
- Module Level AQG324 Qualified. Components Inside are AEC Q101 (MOSFET) & AEC Q200 (Passives) Qualified
- UL 94V−0 Compliant
- This Device is Pb−Free and is RoHS Compliant

Applications

- 48 V Inverter, 48 V Traction

Benefits

- Enable Design of Small, Efficient and Reliable System for Reduced Vehicle Fuel Consumption and CO_2 Emission
- Simplified Vehicle Assembly
- Low Thermal Resistance to Junction to Heat Sink by Direct Mounting via Thermal Interface Material between Module Case and Heat Sink
- Low Inductance

MARKING DIAGRAM

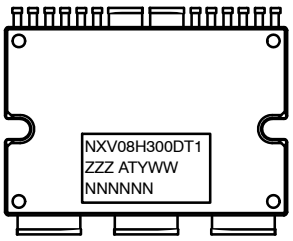

NXV08H300DT1	= Specific Device Code
ZZZ	= Lot ID
AT	= Assembly & Test Location
Y	= Year
WW	= Work Week
NNN	= Serial Number

ORDERING INFORMATION

See detailed ordering and shipping information on page 2 of this data sheet.

© Semiconductor Components Industries, LLC, 2021

ORDERING INFORMATION

Part Number	Package	Pb−Free and RoHS Compliant	Operating Ambient Temperature Range	Packing Method
NXV08H300DT1	APM17−MDC	yes	−40~125°C	Tube

Pin Configuration

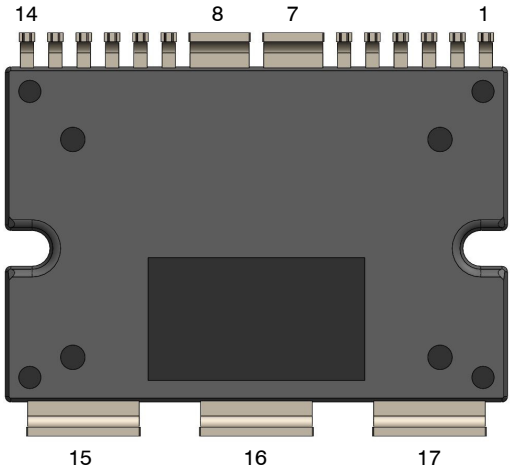

Figure 1. Pin Configuration

PIN DESCRIPTION

Pin No.	Description	Remark
1	Q2 Gate	
2	Q2 Source Sense	
3	B+ #2 Sense	
4	Q4 Gate	
5	Q4 Source Sense	
6	NTC1	
7	Phase Out2	For 3 phase motor inverter, those 2 pins can be used as one phase out
8	Phase Out1	
9	NTC2	
10	Q3 Source Sense	
11	Q3 Gate	
12	B+ #1 Sense	
13	Q1 Source Sense	
14	Q1 Gate	
15	B+ #1	
16	GND	
17	B+ #2	

Block Diagram

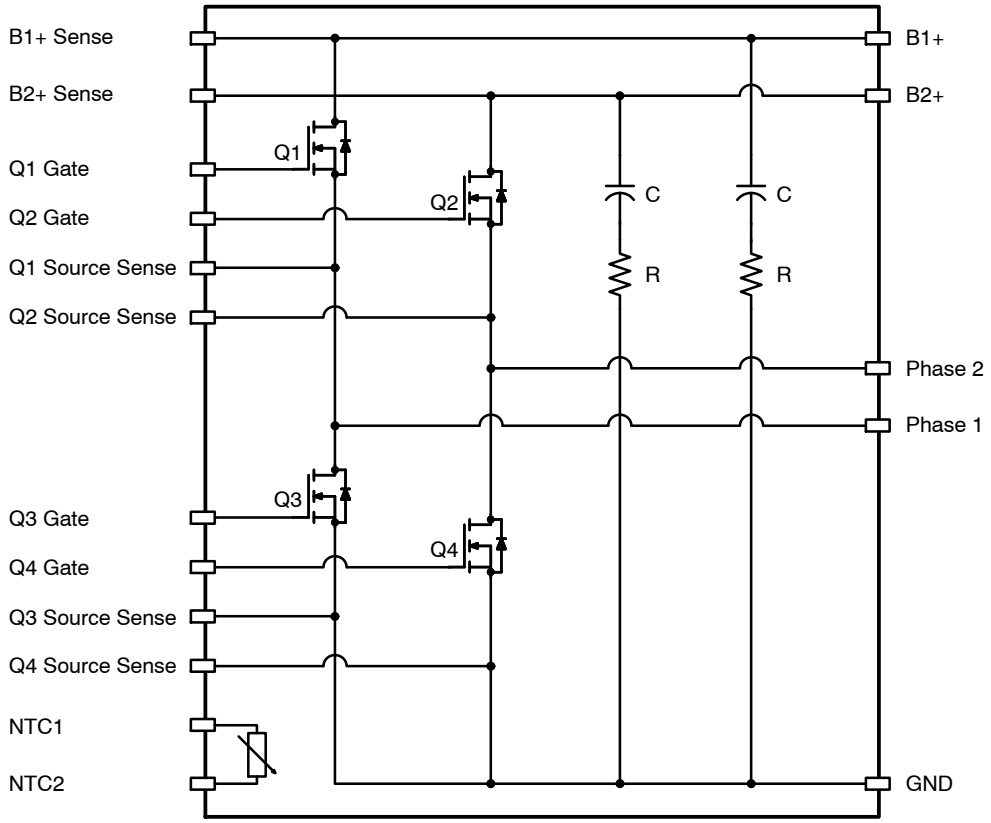

Figure 2. Schematic

Flammability Information

All materials present in the power module meet UL flammability rating class 94V−0.

Compliance to RoHS Directives

The power module is 100% lead free and RoHS compliant 2000/53/C directive.

Solder

Solder used is a lead free SnAgCu alloy.

Base of the leads, at the interface with the package body should not be exposed to more than 200°C during mounting on the PCB, this to prevent the remelt of the solder joints.

ABSOLUTE MAXIMUM RATINGS (T_J = 25°C unless otherwise specified)

Symbol	Parameter	Max.	Unit
VDS(Q1~Q4)	Drain to Source Voltage	80	V
VGS(Q1~Q4)	Gate to Source Voltage	±20	V
EAS(Q1~Q4)	Single Pulse Avalanche Energy (Note 1)	2445	mJ
T_J	Maximum Junction Temperature	175	°C
T_{STG}	Storage Temperature	125	°C

Stresses exceeding those listed in the Maximum Ratings table may damage the device. If any of these limits are exceeded, device functionality should not be assumed, damage may occur and reliability may be affected.

1. Starting T_J = 25°C, L = 0.47 mH, I_{AS} = 102 A, V_{DD} = 72 V during inductor charging and V_{DD} = 0 V during time in avalanche.

ELECTRICAL CHARACTERISTICS (T_J = 25°C, unless otherwise noted)

Characteristic		Condition	Min	Typ	Max	Unit
BVDSS	Drain−to−Source Breakdown Voltage	I_D = 1 mA, V_{GS} = 0 V	80	–	–	
VGS(th)	Gate to Source Threshold Voltage	V_{GS} = V_{DS}, I_D = 1 mA	2	–	4.6	V
VSD	Source−to−Drain Diode Voltage	I_{SD} = 160 A, V_{GS} = 0 V	–	0.79	1.1	V
RDS(ON)Q1, Q2	Q1, Q2 (High Side) MOSFET (Note 2)	V_{GS} = 12 V, I_D = 160 A, T_J = 25°C	–	0.65	0.765	mΩ
RDS(ON) Q3, Q4	Q3, Q4(Low Side) MOSFET (Note 2)	V_{GS} = 12 V, I_D = 160 A, T_J = 25°C	–	0.46	0.58	mΩ
IGSS	Gate−to−Source Leakage Current	V_{GS} = ±20 V, V_{DS} = 0 V, T_J = 25°C	−100	–	+100	nA
IDSS	Drain−to−Source Leakage Current	V_{DS} = 80 V, V_{GS} = 0 V, T_J = 25°C	–	–	2	μA
Module RDS(ON) for Q1 and Q2: From B+1 (or B+2), via Q1 (or Q2), to Phase Out 1 (Phase Out 2) (Note 3)		V_{GS} = 12 V, I_D = 160 A, T_J = 25°C	–	0.96	1.32	mΩ
Module RDS(ON) for Q3 and Q4: From Phase Out 1 (Phase Out 2), via Q3 (Q4), to GND PINs (Note 3)		V_{GS} = 12 V, I_D = 160 A, T_J = 25°C	–	0.9	1.25	mΩ

Product parametric performance is indicated in the Electrical Characteristics for the listed test conditions, unless otherwise noted. Product performance may not be indicated by the Electrical Characteristics if operated under different conditions.

2. All bare die MOSFETs have same die size and same level of Rdson value. However the different Rdson values listed in the datasheet are due to the different access points available inside the module for Rdson measurement. Q3 and Q4 (Low side FETs) has the shortest Rdson measurement path in the layout, in this reason, so Q3 or Q4 Rdson value can be used for the Rdson value per switch for simple power loss calculation.
   Each Rdson measurement paths are as below table, “Resistance Measurement Methods”
3. Module Rdson means total resistance of the measurement path btw Power terminals, referring to the resistance measurement methods table.

RESISTANCE MEASUREMENTS METHODS

	+ Force Pin#	− Force Pin#	+ Sense Pin#	− Sense Pin#
FET Rdson Q1	B1+	Phase1	B1+ Sense	Q1 Source Sense
FET Rdson Q2	B2+	Phase2	B2+ Sense	Q2 Source Sense
FET Rdson Q3	Phase1	GND	Q1 Source Sense	Q3 Source Sense
FET Rdson Q4	Phase2	GND	Q2 Source Sense	Q4 Source Sense
Module Rdson Q1	B1+	Phase1	B1+	Phase1
Module Rdson Q2	B2+	Phase2	B2+	Phase2
Module Rdson Q3	Phase1	GND	Phase1	GND
Module Rdson Q4	Phase2	GND	Phase2	GND

TEMPERATURE SENSE (NTC THERMISTOR)

Parameter		Min	Typ	Max	Unit
Voltage	Current = 1 mA, Temperature 25°C	7.5	–	12	V

THERMAL RESISTANCE

Parameter		Min	Typ	Max	Unit
Rthjc: Thermal Resistance Junction to case, Single Inverter FET	Q1, Q2, Q3, Q4 Thermal Resistance J−C	–	–	0.49	°C/W

ISOLATION VOLTAGE (Isolation voltage between the Base plate and to control pins or power terminals.)

Test	Test Condition	Test Time	Min	Max	Unit
Leakage @ Isolation Voltage (Hi−Pot)	VAC = 3 kV	Time = 1 s	–	250	μA

DYNAMIC AND SWITCHING CHARACTERISTICS (T_J = 25°C unless otherwise noted)

Symbol	Parameter	Condition	Min	Typ	Max	Unit
DYNAMIC CHARACTERISTICS						
C_{iss}	Input Capacitance	V_{DS} = 40 V, V_{GS} = 0 V, f = 750 kHz	–	30,150	–	pF
C_{oss}	Output Capacitance		–	4,505	–	pF
C_{rss}	Reverse Transfer Capacitance		–	77	–	pF
R_g	Gate Resistance	f = 750 kHz	–	4.3	–	Ω
$Q_{g(tot)}$	Total Gate Charge	V_{GS} = 0 to 12 V, I_D =160 A	–	502	–	nC
Q_{gs}	Gate to Source Gate Charge		–	193	–	nC
Q_{gd}	Gate to Drain “Miller” Charge		–	89	–	nC
SWITCHING CHARACTERISTICS						
t_{on}	Turn−On Time	V_{DD} = 48 V, I_D = 400 A V_{GS} = 12 V, R_G(on/off) = 15/15 Ω	–	710	–	ns
$t_{d(on)}$	Turn−On Delay Time		–	235	–	ns
t_r	Turn−On Rise Time		–	475	–	ns
$t_{d(off)}$	Turn−Off Delay Time		–	608	–	ns
t_f	Turn−Off Fall Time		–	290	–	ns
t_{off}	Turn−Off Time		–	898	–	ns

DRAIN−SOURCE DIODE CHARACTERISTICS

Symbol	Parameter	Condition	Min	Typ	Max	Unit
t_{RR}	Reverse Recovery Time	V_{DD} = 48 V, I_D = 400 A V_{GS} = 12 V, R_G(on/off) = 15/15 Ω	–	59	–	ns
Q_{RR}	Reverse Recovery Charge		–	1433	–	nC

4. Dynamic & Switching characteristics data is by characterization test result and guaranteed by design factors.

COMPONENTS

Component	Description	Type	Qty.	Specification
MOSFET	Bare Die	Bare Die	4	80 V 0.58 mΩ
NTC	10 kΩ ±1% 1,600 x 800 μm	Discrete	1	B−Constant $B_{25/50}$ = 3380K $B_{25/85}$ = 3435K $B_{25/100}$ = 3455K
Capacitor (Snubber)	1,800 x 800 μm	Discrete	2	15 nF
Resistor (Snubber)	2,000 x 1,250 μm	Discrete	2	1 Ω

TYPICAL CHARACTERISTICS

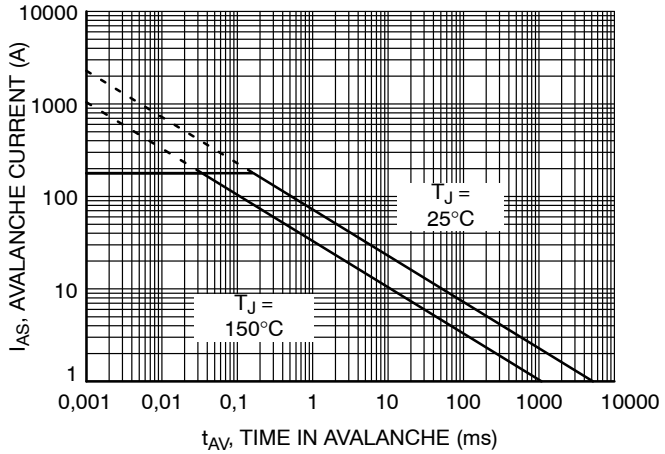

Figure 3. Unclamped Inductive Switching Capability

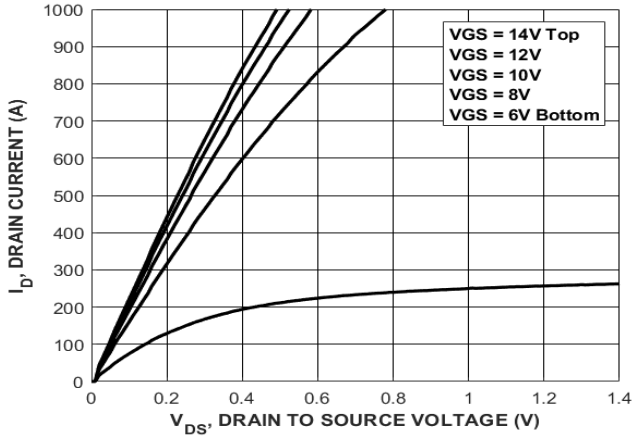

Figure 4. Saturation Characteristics

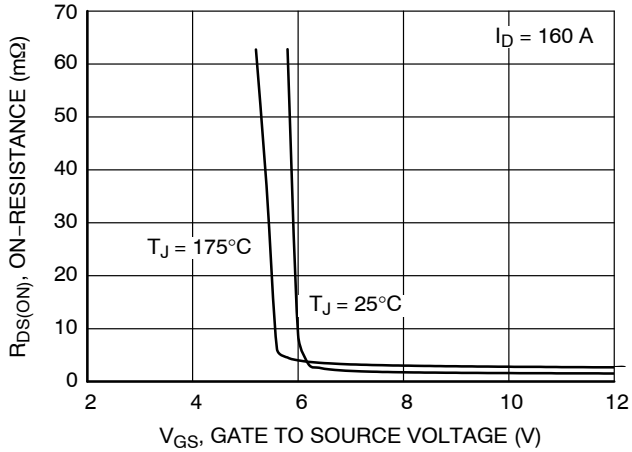

Figure 5. R_{DSON} vs. Gate Voltage

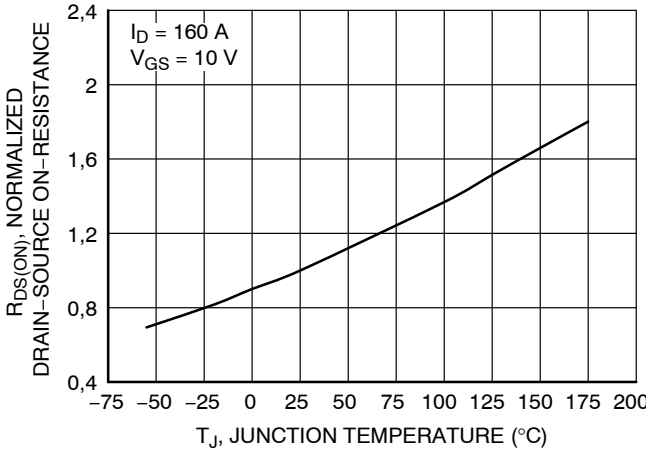

Figure 6. R_{DSON} vs. Temperature

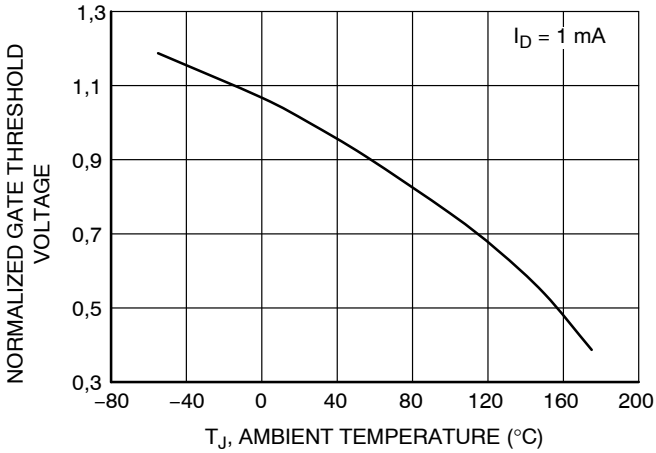

Figure 7. Normalized Gate Threshold Voltage vs. Temperature

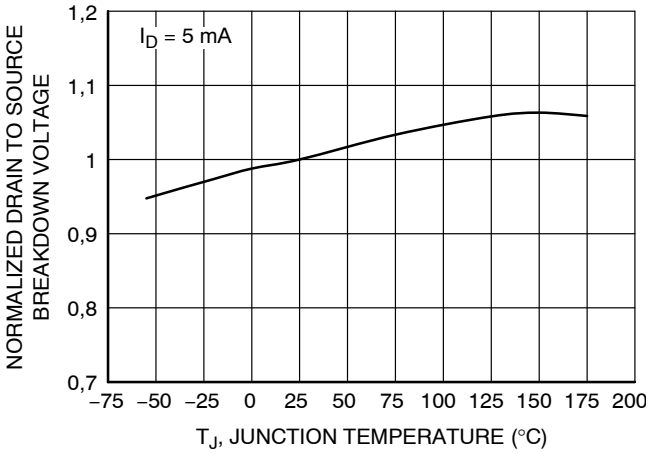

Figure 8. Normalized Drain to Source Breakdown Voltage vs. Junction Temperature

TYPICAL CHARACTERISTICS (CONTINUED)

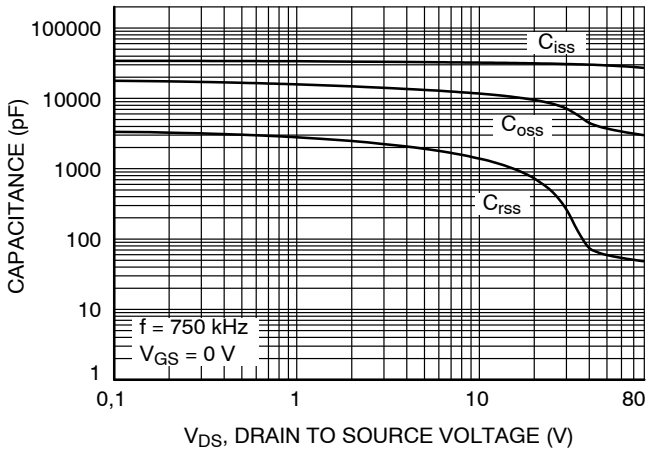

Figure 9. Capacitance vs. Drain to Source Voltage

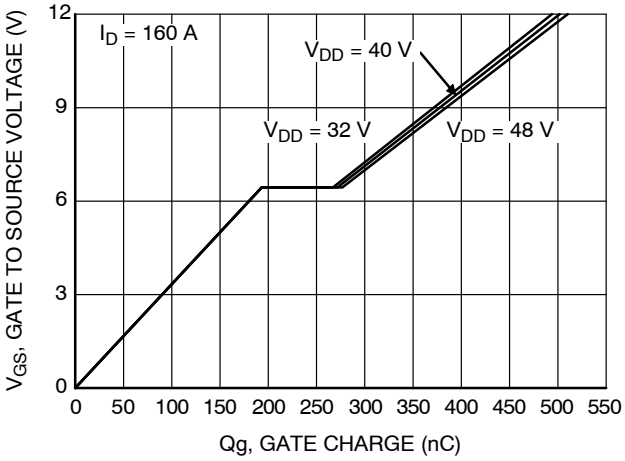

Figure 10. Gate Charge vs. Drain to Source Voltage

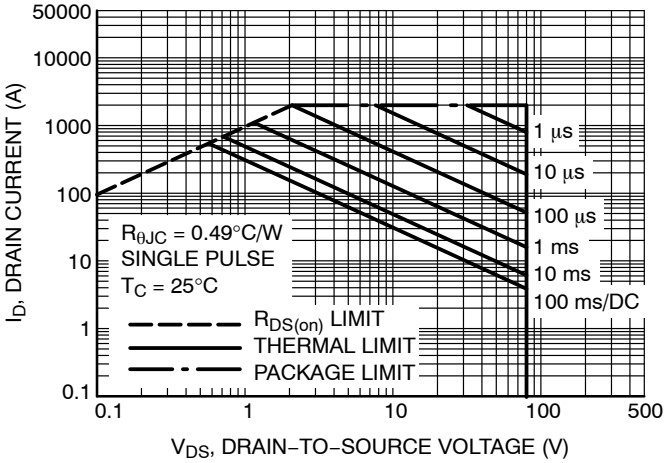

Figure 11. Safe Operating Area

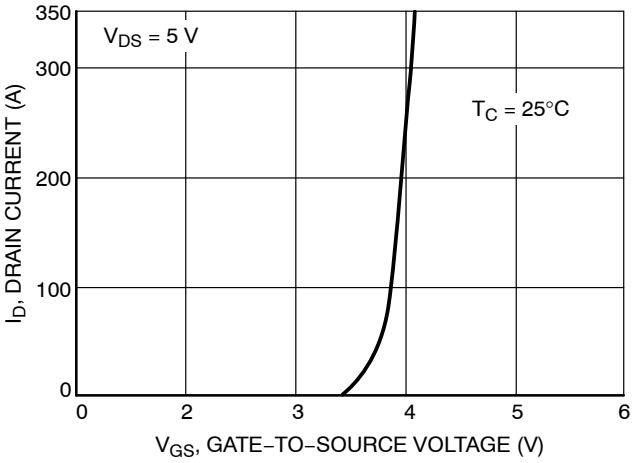

Figure 12. Transfer Characteristics

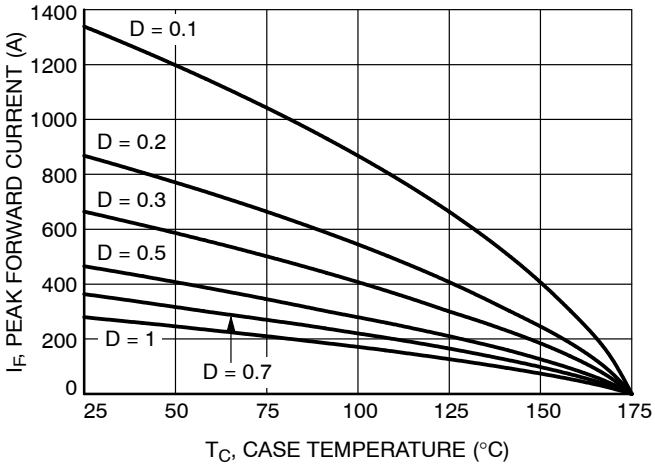

Figure 13. Body Diode Current

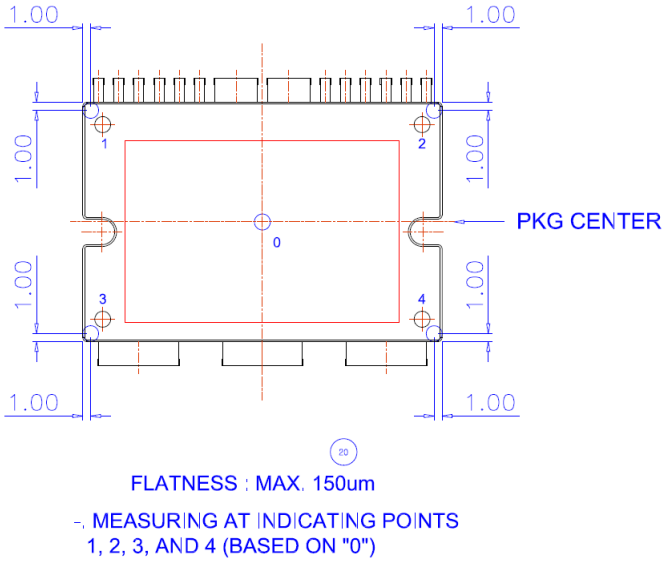

Figure 14. Flatness Measurement Position

MECHANICAL CHARACTERISTICS AND RATINGS

Parameter	Test Conditions	Min	Typ	Max	Units
Device Flatness	Refer to the package dimensions	0	–	150	um
Mounting Torque	Mounting screw: M3, recommended 0.7 N•m	0.4	–	1.4 (Note 5)	N•m
Weight		–	23.7	–	g

5. Max Torque rating can be different by the type of screw, such as the screw head diameter, use or without use of Washer. In case of special screw mounting method is applied, contact to **onsemi** the proper information of mounding condition.

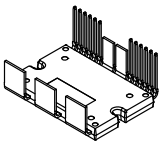

APM17−MDC
CASE MODHH
ISSUE C

DATE 08 DEC 2021

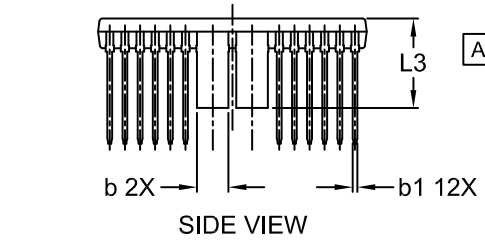

SIDE VIEW

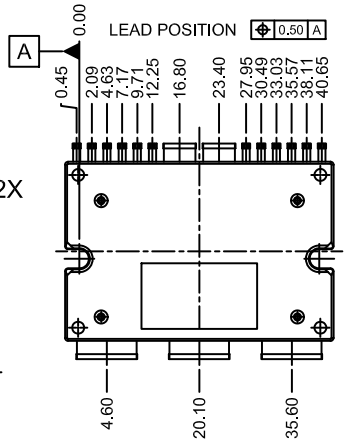

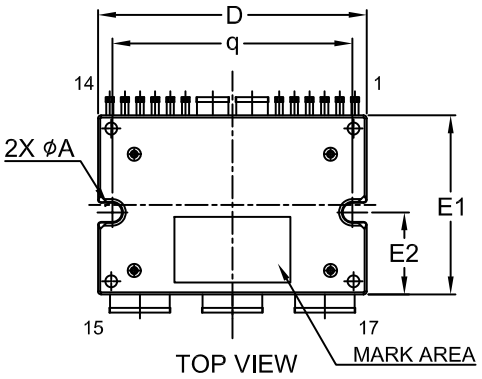

TOP VIEW

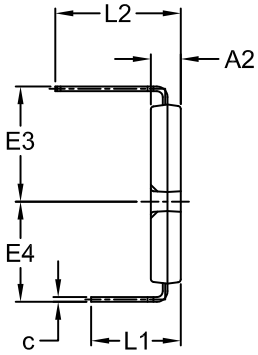

END VIEW

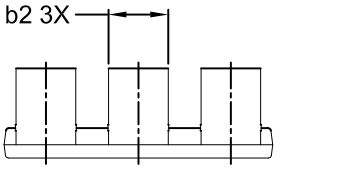

SIDE VIEW

NOTES:

1. DIMENSIONING AND TOLERANCING PER. ASME Y14.5M, 2009.
2. CONTROLLING DIMENSION: MILLIMETERS
3. DIMENSIONS ARE EXCLUSIVE OF BURRS, MOLD FLASH AND TIE BAR EXTRUSIONS.

DIM	MILLIMETERS		
	MIN.	NOM.	MAX.
A2	4.90	5.00	5.10
b	5.20	5.30	5.40
b1	0.70	0.80	0.90
b2	9.90	10.00	10.10
c	0.75	0.80	0.90
D	44.90	45.00	45.10
E1	29.90	30.00	30.10
E2	13.65	13.75	13.85
E3	19.00	19.30	19.60
E4	16.50	16.80	17.10
L1	14.70	15.00	15.30
L2	20.70	21.00	21.30
L3	14.70	15.00	15.30
q	40.10	40.20	40.30
ϕA	3.10	3.20	3.30

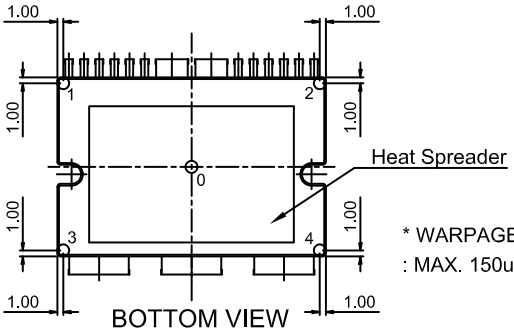

BOTTOM VIEW

* WARPAGE(POINT 1,2,3,4 BASED ON 0)
: MAX. 150um

GENERIC MARKING DIAGRAM*

XXXXXXXXXXXXXXXXX
ZZZ ATYWW
NNNNNNN

XXXX = Specific Device Code
ZZZ = Lot ID
AT = Assembly & Test Location
Y = Year
W = Work Week
NNN = Serial Number

*This information is generic. Please refer to device data sheet for actual part marking. Pb−Free indicator, “G” or microdot “▪”, may or may not be present. Some products may not follow the Generic Marking.

DOCUMENT NUMBER:	**98AON28701H**	Electronic versions are uncontrolled except when accessed directly from the Document Repository. Printed versions are uncontrolled except when stamped “CONTROLLED COPY” in red.
DESCRIPTION:	**APM17−MDC**	**PAGE 1 OF 1**

onsemi and onsemi are trademarks of Semiconductor Components Industries, LLC dba **onsemi** or its subsidiaries in the United States and/or other countries. **onsemi** reserves the right to make changes without further notice to any products herein. **onsemi** makes no warranty, representation or guarantee regarding the suitability of its products for any particular purpose, nor does **onsemi** assume any liability arising out of the application or use of any product or circuit, and specifically disclaims any and all liability, including without limitation special, consequential or incidental damages. **onsemi** does not convey any license under its patent rights nor the rights of others.

onsemi, onsemi, and other names, marks, and brands are registered and/or common law trademarks of Semiconductor Components Industries, LLC dba "**onsemi**" or its affiliates and/or subsidiaries in the United States and/or other countries. **onsemi** owns the rights to a number of patents, trademarks, copyrights, trade secrets, and other intellectual property. A listing of **onsemi**'s product/patent coverage may be accessed at www.onsemi.com/site/pdf/Patent−Marking.pdf. **onsemi** reserves the right to make changes at any time to any products or information herein, without notice. The information herein is provided "as−is" and **onsemi** makes no warranty, representation or guarantee regarding the accuracy of the information, product features, availability, functionality, or suitability of its products for any particular purpose, nor does **onsemi** assume any liability arising out of the application or use of any product or circuit, and specifically disclaims any and all liability, including without limitation special, consequential or incidental damages. Buyer is responsible for its products and applications using **onsemi** products, including compliance with all laws, regulations and safety requirements or standards, regardless of any support or applications information provided by **onsemi**. "Typical" parameters which may be provided in **onsemi** data sheets and/or specifications can and do vary in different applications and actual performance may vary over time. All operating parameters, including "Typicals" must be validated for each customer application by customer's technical experts. **onsemi** does not convey any license under any of its intellectual property rights nor the rights of others. **onsemi** products are not designed, intended, or authorized for use as a critical component in life support systems or any FDA Class 3 medical devices or medical devices with a same or similar classification in a foreign jurisdiction or any devices intended for implantation in the human body. Should Buyer purchase or use **onsemi** products for any such unintended or unauthorized application, Buyer shall indemnify and hold **onsemi** and its officers, employees, subsidiaries, affiliates, and distributors harmless against all claims, costs, damages, and expenses, and reasonable attorney fees arising out of, directly or indirectly, any claim of personal injury or death associated with such unintended or unauthorized use, even if such claim alleges that **onsemi** was negligent regarding the design or manufacture of the part. **onsemi** is an Equal Opportunity/Affirmative Action Employer. This literature is subject to all applicable copyright laws and is not for resale in any manner.

ADDITIONAL INFORMATION

TECHNICAL PUBLICATIONS:
Technical Library: www.onsemi.com/design/resources/technical−documentation
onsemi Website: www.onsemi.com

ONLINE SUPPORT: www.onsemi.com/support
For additional information, please contact your local Sales Representative at
www.onsemi.com/support/sales