Sep.1.2025 Copyright 2025 HIROSE ELECTRIC CO., LTD. All Rights Reserved.
In case of consideration for using Automotive equipment / device which demand high reliability, kindly contact our sales window correspondents.

HRS DRAWING FOR REFERENCE

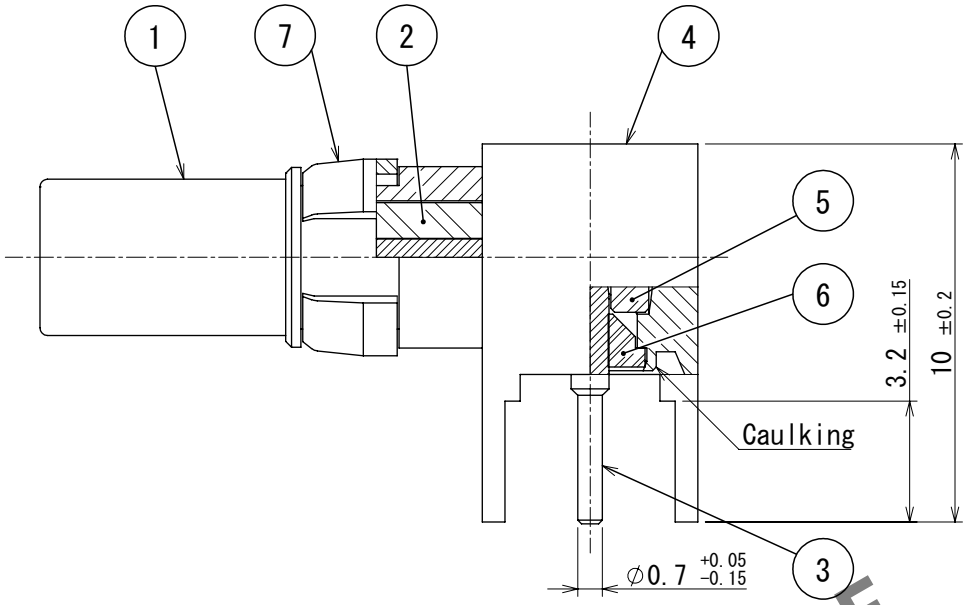

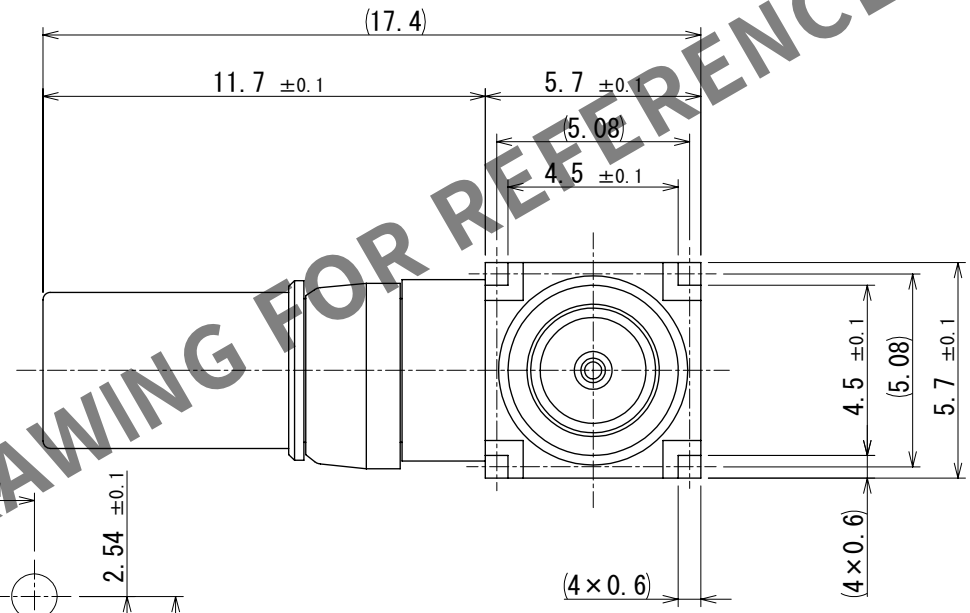

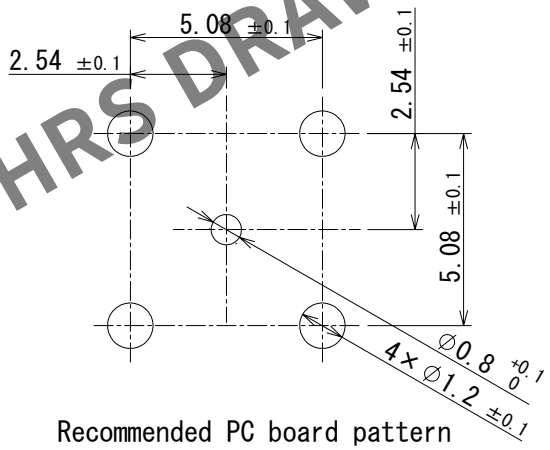

Recommended PC board pattern

△1 CAD change

NO.	MATERIAL	FINISH , REMARKS	NO.	MATERIAL	FINISH , REMARKS
4	Brass	Gold plating			
3	Beryllium copper	Gold plating	7	Beryllium copper	Nickel plating
2	PTFE		6	PTFE	
1	Brass	Gold plating	5	PTFE	

TOLERANCES SEE TABLE FOR SPECIFIED, UNLESS OTHERWISE		
OVER	TO	TOLERANCE
	6	±0.3
6	18	±0.5
18	50	±0.7
50	125	±1

UNITS mm
SCALE 5:1
ANGULAR ±1°
HIROSE ELECTRIC CO., LTD.

	COUNT	DESCRIPTION OF REVISIONS	DESIGNED	CHECKED	DATE
△1	1	DIS-D-00011850	MK. INOUE	NK. NINOMIYA	2023.12.27

APPROVED :	IJ. MITANI	2005.11.11
CHECKED :	KY. SHIMIZU	2005.11.09
DESIGNED :	TO. KATAYAMA	2005.11.04
DRAWN :	YK. SUGIYAMA	2005.11.01

DRAWING No. EDC-022928-40-40
PART No. P051-LR-PC-1(40)
CODE No. CL0330-0017-0-40
△1 1/1

ASSEMBLY DRAWING

FORM HC0011-4

3D Model File Name:CL0330-0017-0-00