TOLERANCE UNLESS OTHERWISE SPECIFIED	
0-10	±0.20
10-30	±0.30
30-100	±0.40

THIS IS A C.A.D. GENERATED DRAWING
DO NOT MAKE MANUAL REVISIONS TO MASTER.

ISSUE NUMBER	
ORIGINAL	1

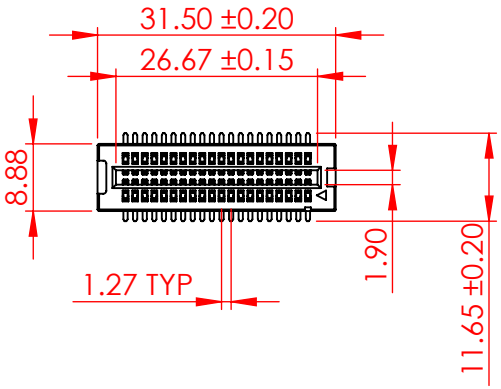

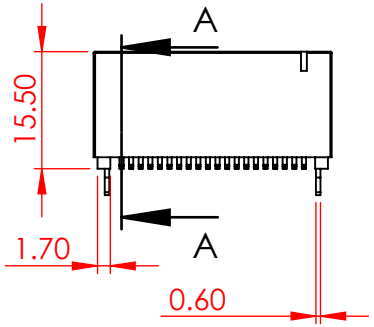

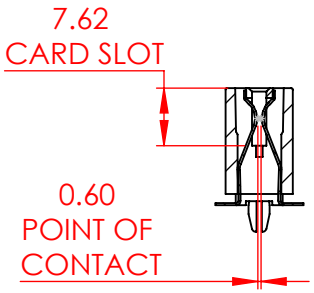

SECTION A-A
SCALE 1 : 1

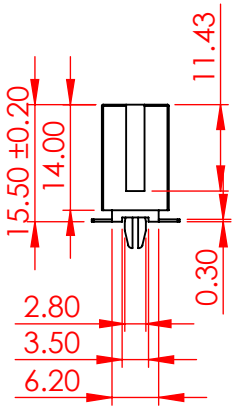

SPECIFICATIONS:

MATERIAL:	
HOUSING:	HI-TEMP THERMOPLASTIC, PPS
CONTACT:	COPPER ALLOY
PLATING:	15µ" GOLD PLATING ON CONTACT AREA, TIN PLATING ON SOLDERING AREA
ELECTRICAL	
VOLTAGE RATING:	250 VAC RMS
CURRENT RATING:	1A
DIELECTRIC WITHSTANDING VOLTAGE:	500VAC RMS 60Hz FOR 60s
INSULATION RESISTANCE:	1000 MEGA OHMS MIN AT 500VDC
CONTACT RESISTANCE:	30 mOHMS MAX
MECHANICAL	
RETENTION FORCE:	460g MIN PER CONTACT
INSERTION FORCE:	230g MAX PER CONTACT PAIR
WITHDRAWAL FORCE:	15g MIN PER CONTACT PAIR
ENVIRONMENTAL	
TEMPERATURE RANGE:	-55°C TO +105°C

NOTE:
8, 10, 12, 16, 20, 40, 50, 60, 80 AND 120 POSITIONS ARE AVAILABLE

RoHS COMPLIANT

THIS SERIES FULLY CONFORMS TO THE EUROPEAN UNION DIRECTIVES 2011/65/EU FOR RoHS COMPLIANCY.

302 SERIES CARD EDGE CONNECTOR

ACAD REFERENCE NO.:	302 Assembly		UNIT: MM
DRAWN:	J.L.	DATE:	June 6, 2023
CHECKED:		DATE:	
SCALE:	1:1	SHEET	1 OF 2
DRAWING NUMBER:	302-040-399-206		ISSUE 1
PART NUMBER:	302-040-399-206		

EDAC INC
TORONTO, ONTARIO
CANADA
YOUR CONNECTION TO QUALITY & SERVICE

THESE DRAWINGS AND SPECIFICATIONS ARE THE PROPERTY OF EDAC INC.,AND SHALL NOT BE REPRODUCED,OR COPIED OR USED AS THE BASIS FOR THE MANUFACTURE OR SALE OF APPARATUS WITHOUT WRITTEN PERMISSION.

NO. OF POS.	DIMENSION A			DIMENSION C	
	CONTACT CODE 21	CONTACT CODE 58	CONTACT CODE 99	MOUNTING CODE 05	MOUNTING CODE 06
04	1.27*			5.08	NA
06	2.54*			6.35	NA
08	3.81			7.62	7.62
10	5.08			8.89	8.89
12	6.35			10.16	10.16
14	7.62*			11.43	NA
16	8.89			12.70	12.70
20	11.43			15.24	15.24
22	12.70*			16.51	NA
24	13.97*			17.78	NA
26	15.24*			19.05	NA
30	17.78*			21.59	NA
32	19.05*			22.86	NA
36	21.59*			25.40	NA
40	24.13			27.94	27.94
48	29.21*			33.02	NA
50	30.48			34.29	34.29
52	31.75*			35.56	NA
60	36.83			40.64	40.64
68	41.91	NA	41.91*	45.72	NA
70	43.18	NA	43.18*	46.99	NA
80	49.53			53.34	53.34
100	62.23	NA	62.23*	66.04	NA
110	68.58	NA	68.58*	72.39	NA
120	74.93	NA	74.93	78.74	78.74
124	77.47	NA	77.47*	81.28	NA

*NOT AVAILABLE FOR CONTACT CODE 99 WITH MOUNTING CODE 06
NA = NOT AVAILABLE

THIS IS A C.A.D. GENERATED DRAWING
DO NOT MAKE MANUAL REVISIONS TO MASTER.

ISSUE NUMBER	
ORIGINAL	1

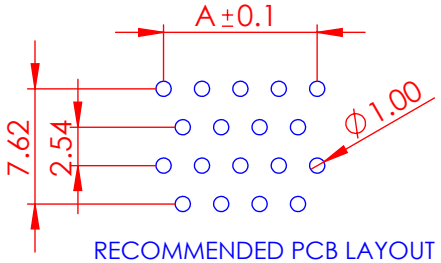

RECOMMENDED PCB LAYOUT
(CONTACT CODE 21)

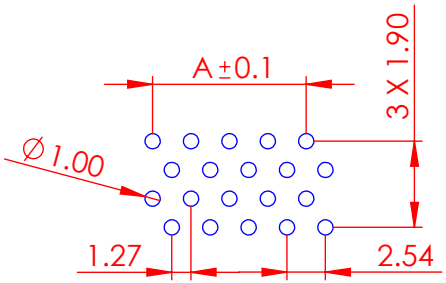

RECOMMENDED PCB LAYOUT
(CONTACT CODE 58)

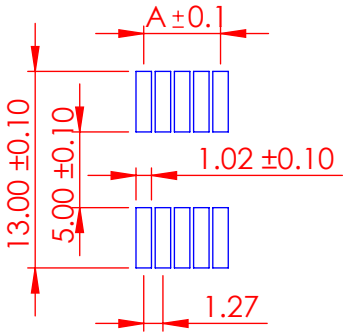

RECOMMENDED PCB LAYOUT
(CONTACT CODE 99, MOUNTING CODE 01)

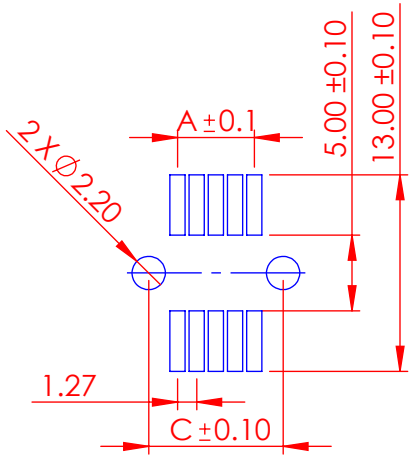

RECOMMENDED PCB LAYOUT
(CONTACT CODE 99, MOUNTING CODE 05)

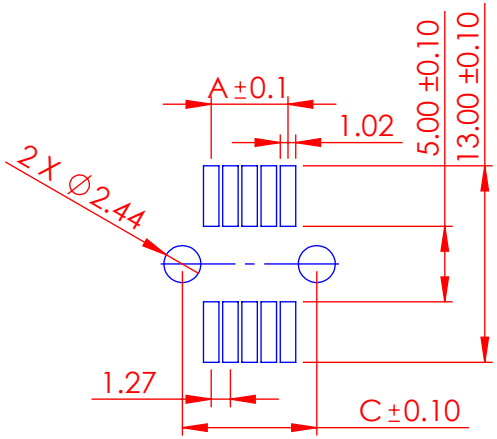

RECOMMENDED PCB LAYOUT
(CONTACT CODE 99, MOUNTING CODE 06)

302-040-399-206
- MOUNTING CODE
- CONTACT CODE

RoHS COMPLIANT

THIS SERIES FULLY CONFORMS TO THE EUROPEAN UNION DIRECTIVES 2011/65/EU FOR RoHS COMPLIANCY.

302 SERIES CARD EDGE CONNECTOR

ACAD REFERENCE NO.: 302 ASSEMBLY		UNIT: MM
DRAWN: J.L.	DATE: June 6, 2023	
CHECKED:	DATE:	
SCALE: 1:1	SHEET 2 OF 2	
DRAWING NUMBER: 302-040-399-206		ISSUE 1
PART NUMBER: 302-040-399-206		

EDAC INC
TORONTO, ONTARIO
CANADA
YOUR CONNECTION TO QUALITY & SERVICE

THESE DRAWINGS AND SPECIFICATIONS ARE THE PROPERTY OF EDAC INC.,AND SHALL NOT BE REPRODUCED,OR COPIED OR USED AS THE BASIS FOR THE MANUFACTURE OR SALE OF APPARATUS WITHOUT WRITTEN PERMISSION.