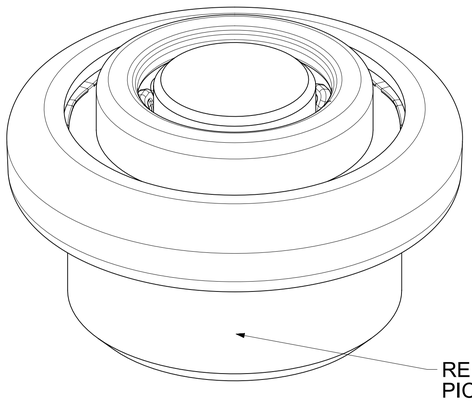


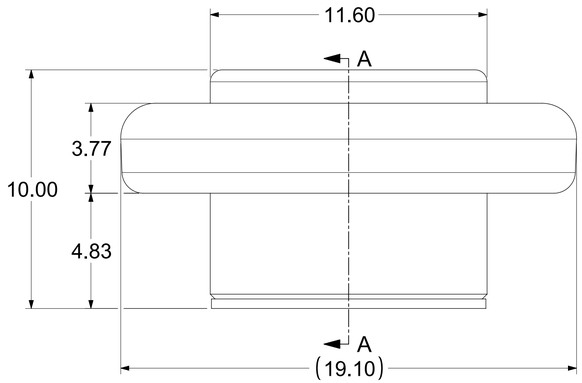


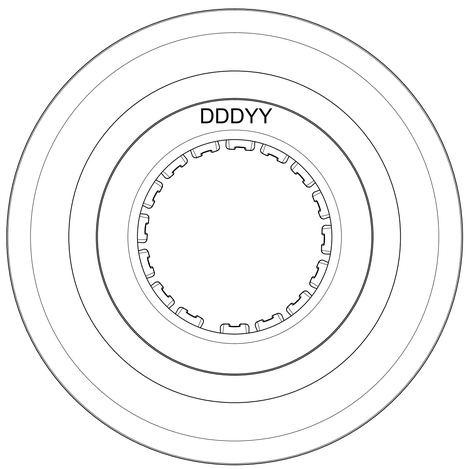


## RECOMMENDED PCB LAYOUT

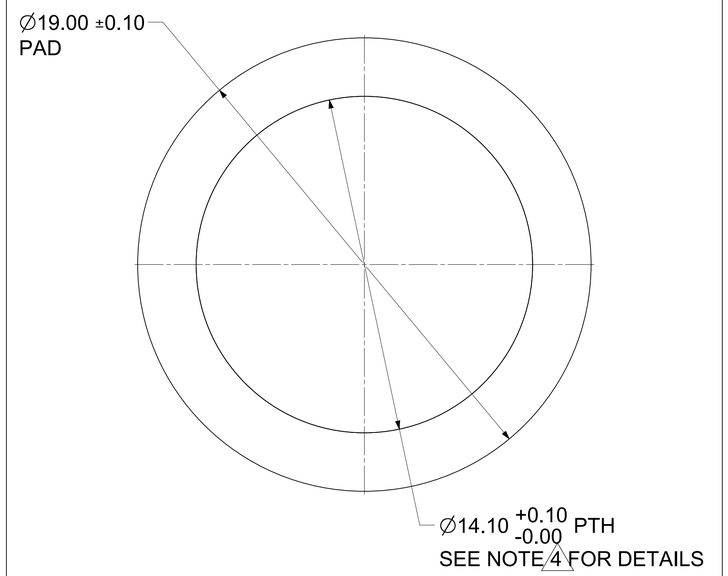


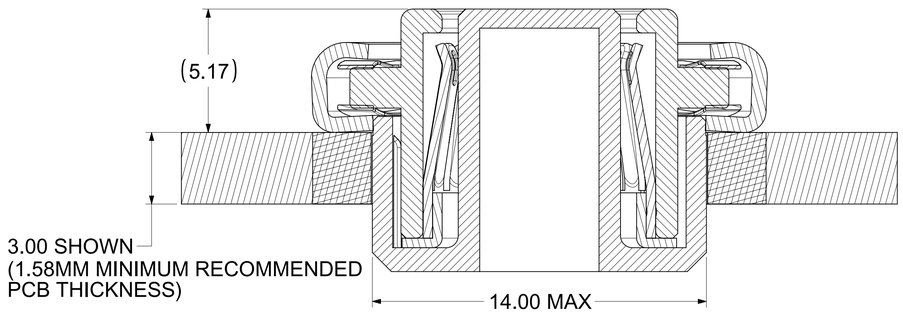


SECTION A-A

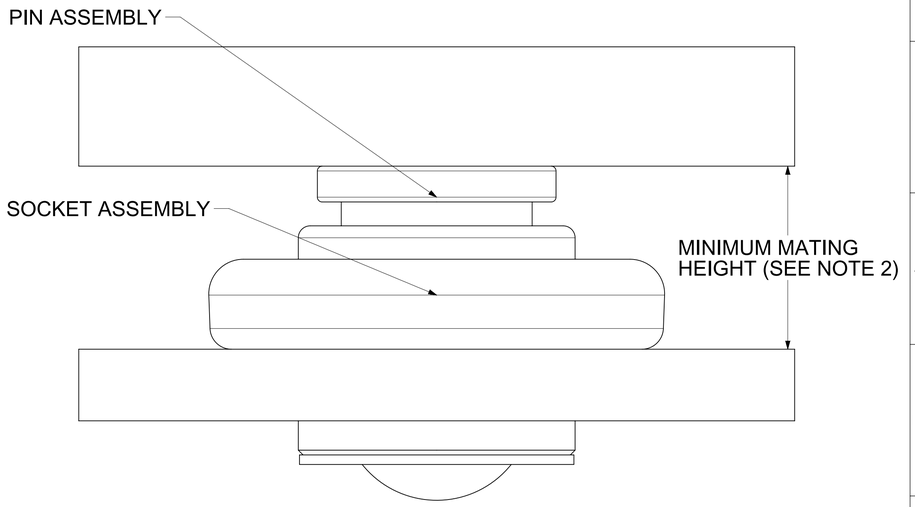


## MATING PROFILE

NOTES:
1. MATERIALS:
   PICK AND PLACE CAP: LCP UL94, V-0 COLOR BLACK
   RETENTION CAP: STAINLESS STEEL
   BASE METAL: HIGH CONDUCTIVE COPPER ALLOY
   PLATING ON CONTACTS: 0.75 MICRON MIN GOLD OVER 1.27 MICRON MIN NICKEL
   PLATING ON BODY: 3.18 MICRON MIN SILVER OVER 1.27 MICRON MIN NICKEL
2. MATES WITH STANDARD PIN DRAWINGS:
   i. 8.0MM SMT DRAWING 2032633080-SD, MIN. MATING DISTANCE 7.32MM
   ii. 8.0MM PRESS FIT DRAWING 2032630001-SD, MIN. MATING DISTANCE 7.67MM
   iii. 8.0MM SCREW MOUNT DRAWING 2032634185-SD, MIN. MATING DISTANCE 10.67MM
3. PRODUCT SPECIFICATION: 2043130001-PS
4. APPLICATION SPECIFICATION: 2043130001-AS
   SEE APPLICATION SPEC FOR SOLDERING INFORMATION.
5. PACKAGING SPECIFICATION: 2043650010-PK
6. SILVER COMPONENTS WILL BE SUPPLIED TARNISH FREE
   BUT MAY TARNISH OVER TIME.
7. PICK AND PLACE CAP TO BE REMOVED AFTER SOLDERING.
   CAP TO BE PUSHED OUT OF BOTTOM FROM THE TOP.
8. DATE CODE TO BE LASER MARKED APPROXIMATELY WHERE SHOWN
   USING DDDYY FORMAT

THIS DRAWING CONTAINS INFORMATION THAT IS PROPRIETARY TO MOLEX ELECTRONIC TECHNOLOGIES, LLC AND SHOULD NOT BE USED WITHOUT WRITTEN PERMISSION

| DIMENSION UNITS | SCALE |
|---|---|
| mm | NTS |

GENERAL TOLERANCES (UNLESS SPECIFIED)

| | | |
|---|---|---|
| ANGULAR TOL | ± | 0.5 ° |
| 4 PLACES | ± | |
| 3 PLACES | ± | |
| 2 PLACES | ± | 0.15 |
| 1 PLACE | ± | 0.25 |
| 0 PLACES | ± | |

DRAFT WHERE APPLICABLE MUST REMAIN WITHIN DIMENSIONS

CURRENT REV DESC: UPDATED THE TITLE BLOCK

EC NO: 747243
DRWN: SACHIK7 2023/02/28
CHK'D: SCS02 2023/04/25
APPR: HTHYAGARAJ 2023/04/26

INITIAL REVISION:
DRWN: JJONIAK 2017/05/11
APPR: JJONIAK 2018/06/14

molex

8.0MM SENTRALITY TOP ENTRY SMT
SOCKET WITH FLOAT IN TRAY

PRODUCT CUSTOMER DRAWING

| DOCUMENT NUMBER | DOC TYPE | DOC PART | REVISION |
|---|---|---|---|
| 2043650010-SD | PSD | 000 | C2 |

| THIRD ANGLE PROJECTION | DRAWING | SERIES | MATERIAL NUMBER | CUSTOMER | SHEET NUMBER |
|---|---|---|---|---|---|
| | D-SIZE | 204365 | 2043650010 | GENERAL MARKET | 1 OF 1 |

| DOCUMENT STATUS | P1 | RELEASE DATE | 2023/05/08 05:38:49 |
|---|---|---|---|