RONDA-O-B

~50° + 30° oval beam with holder B compatible with 3rd party connectors from BJB, IDEAL and Stucchi.



SPECIFICATION:

Dimensions	Ø 69.9 mm
Height	14.5 mm
Fastening	socket
ROHS compliant	yes

MATERIALS:

Component	Type	Material	Colour	Finish
F15990_RONDA-O	Single lens	PMMA	clear	
F15586_RONDA-HLD-B	Holder	PC	white	

ORDERING INFORMATION:

Quantities for one set:

Single lens	1
Holder	1

LEDiL is a registered trademark of LEDiL Oy in the European Union, USA, and certain other countries.

Component		Qty in box	MOQ	MPQ	Box weight (kg)
F15990_RONDA-O » Box size: 480 x 280 x 300 mm	Single lens	420	120	30	6.5
F15586_RONDA-HLD-B » Box size: 480 x 280 x 300 mm	Holder	420	120	30	4.4

LEDiL is a registered trademark of LEDiL Oy in the European Union, USA, and certain other countries.

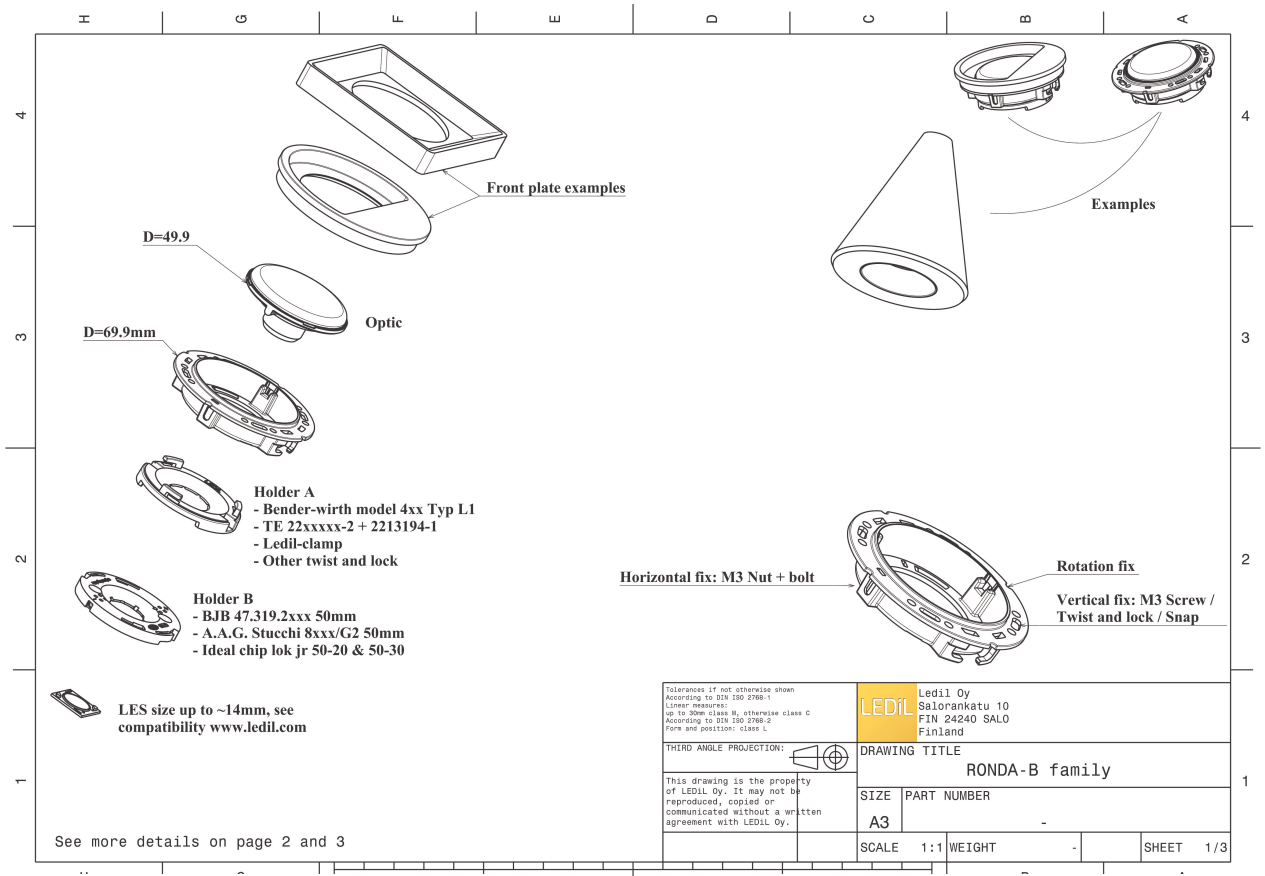

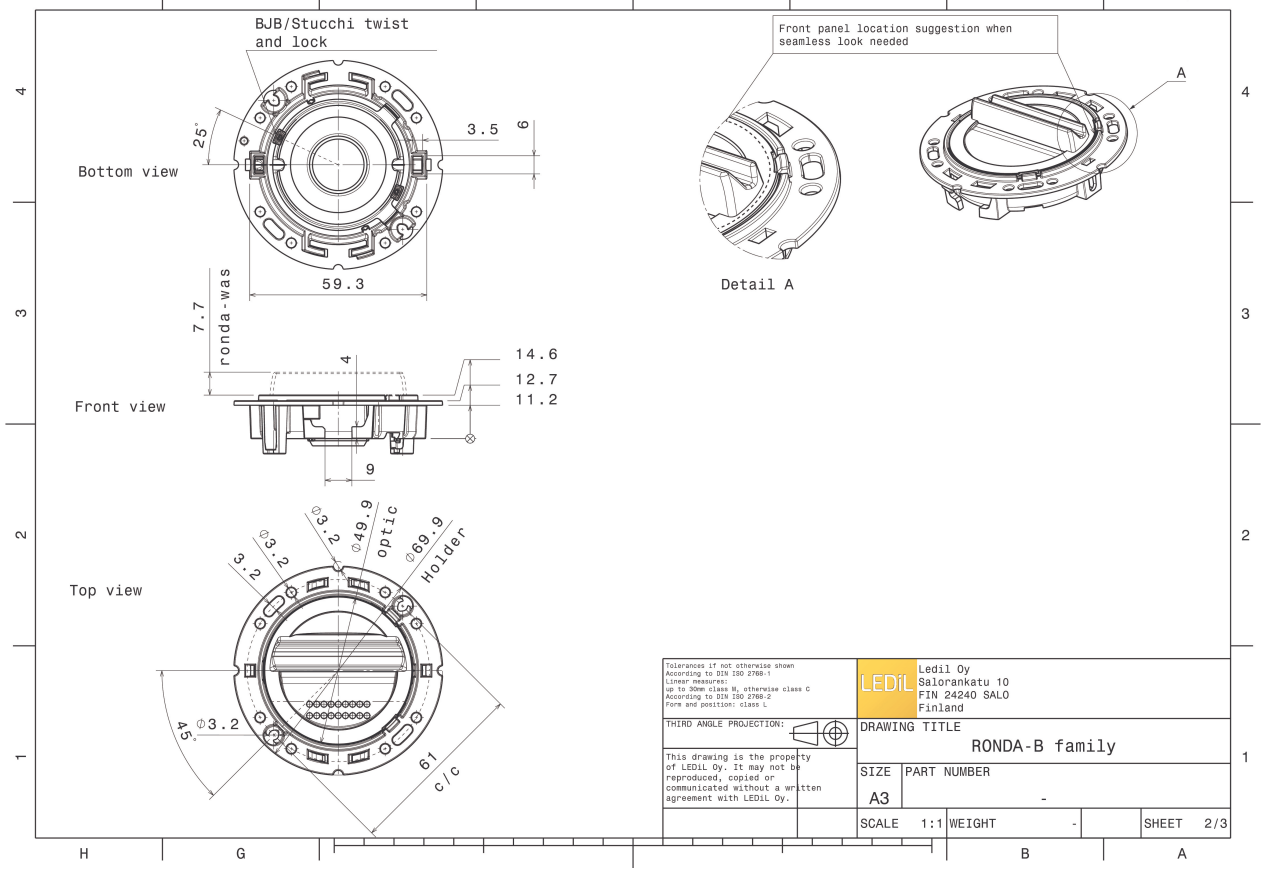

LEDiL is a registered trademark of LEDiL Oy in the European Union, USA, and certain other countries.

OPTIC/HOLDER ASSEMBLY

1. Place pin on the side of the lens into relative hole on the holder.

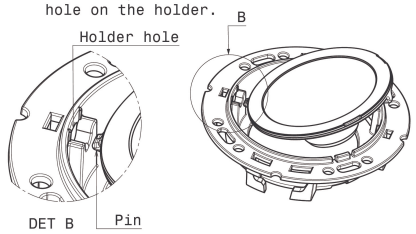

2. Press the lens under clips on the holder, ensuring both clips are fixed.

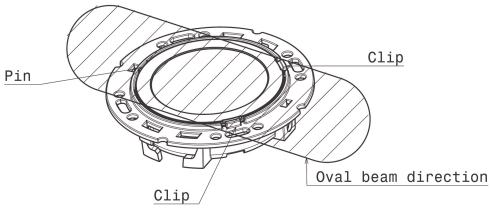

TYPICAL CONNECTOR ASSEMBLY (including solderless BJB 47.319.2xxx 50mm as example)

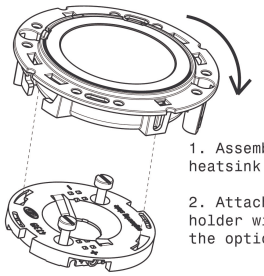

1. Assemble LED and BJB connector on heatsink with M3 screw.

2. Attach optic by aligning hooks in the holder with connector holes and turning the optic holder clockwise until it locks.

TYPICAL CONNECTOR ASSEMBLY (including solderless IDEAL chip lok jr 50-20 as example)

1. Assemble LED and IDEAL connector on heatsink with M3 screw.

2. Attach optic by aligning the screw towers in the holder with relative holes in heatsink. Optionally use 2 position pins in the holder bottom as focus element.

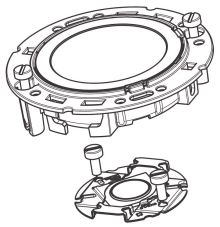

Tolerances if not otherwise shown
According to DIN ISO 2768-1
Linear measures:
up to 30mm class H, otherwise class C
According to DIN ISO 2768-2
Form and position: class L

THIRD ANGLE PROJECTION:

This drawing is the property of LEDiL Oy. It may not be reproduced, copied or communicated without a written agreement with LEDiL Oy.

LEDiL
Ledil Oy
Salorankatu 10
FIN 24240 SALO
Finland

DRAWING TITLE
RONDA-B family

SIZE	PART NUMBER
A3	-

SCALE 1:1 | WEIGHT - | SHEET 3/3

See also our general installation guide: www.ledil.com/installation_guide

LEDiL is a registered trademark of LEDiL Oy in the European Union, USA, and certain other countries.

OPTICAL RESULTS (MEASURED):

PHILIPS

LED	Fortimo SLM L19 + SLM holder
FWHM / FWTM	55.0 + 40.0° / 109.0 + 104.0°
Efficiency	81 %
Peak intensity	0.8 cd/lm
LEDs/each optic	1
Light colour	White

Required components:



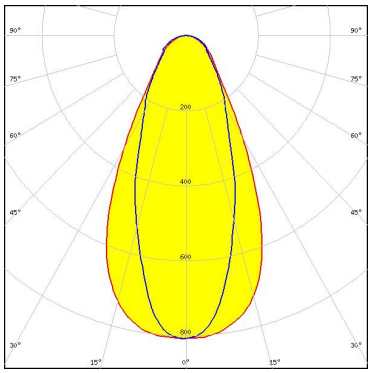

LEDiL is a registered trademark of LEDiL Oy in the European Union, USA, and certain other countries.

OPTICAL RESULTS (SIMULATED):

CREE LEDs

LED	CXA/B 15xx
FWHM / FWTM	Asymmetric
Efficiency	0 %
LEDs/each optic	1
Light colour	White
Required components:	

LEDiL is a registered trademark of LEDiL Oy in the European Union, USA, and certain other countries.

GENERAL INFORMATION:

NOTE: The typical beam angle will be changed by different color, chip size and chip position tolerance. The typical total beam angle is the full angle measured where the luminous intensity is half of the peak value.

Due to use of high power COB's with this product, special attention to proper thermal design is highly recommended. LEDiL has no liability for direct, indirect or consecutive damages arising from the LEDiL products being used outside of the recommended temperature range.

MATERIALS:

As part of our continuous research and improvement processes, and to ensure the best possible quality and availability of our products, LEDiL reserves the right to change material grades without notice.

PRODUCT DATA USER AGREEMENT AND DISCLAIMER:

The measured data in the provided downloadable LEDiL Product Datasheets and Mechanical 2D-Drawings is rounded and provided as reference for planning. LEDiL Oy's optical specifications have been verified by conducting performance testing of the products in accordance with the company's quality system. The reported data are averaged results of multiple measurements with typical variation. LEDiL Oy reserves the right to without prior notification make changes and improvements to its products.

LEDiL Oy assumes neither warranty, nor guarantee nor any other liability of any kind for the contents and correctness of the provided data. The provided data has been generated with highest diligence but the provided data may in reality not represent the complete possible variation range of all intrinsic parameters. Therefore, in certain cases a deviation from the provided data could occur.

LEDiL Oy reserves the right to undertake technical changes of its products without further notification which could lead to changes in the provided data. LEDiL Oy assumes no liability of any kind for the possible deviation from any provided data or any other damage resulting from the usage of the provided data.

The user agrees to this disclaimer and user agreement with the download or usage of the provided files.

LEDiL Oy
Joensuunkatu 13
FI-24240 SALO
Finland

LEDiL Inc.
228 West Page Street
Suite D
Sycamore IL 60178
USA

Ledil Optics Technology (Shenzhen) Co., Ltd.
405 , Block B
Casic Motor Building
Shenzhen 518057
P.R.CHINA

Local sales and technical support
www.ledil.com/
where_to_buy

Shipping locations
Salo, Finland
Hong Kong, China

Distribution Partners
www.ledil.com/
where_to_buy

LEDiL is a registered trademark of LEDiL Oy in the European Union, USA, and certain other countries.