Data sheet



# AFM60A-S1PK262144

## AFS/AFM60 SSI

**ABSOLUTE ENCODERS**

SICK
Sensor Intelligence.



Illustration may differ

## Ordering information

| Type | part no. |
|---|---|
| AFM60A-S1PK262144 | 1037520 |

Other models and accessories ➜ www.sick.com/AFS_AFM60_SSI

## Detailed technical data

### Safety-related parameters

| | |
|---|---|
| **$MTTF_D$ (mean time to dangerous failure)** | 250 years (EN ISO 13849-1) [1] |

[1] This product is a standard product and does not constitute a safety component as defined in the Machinery Directive. Calculation based on nominal load of components, average ambient temperature 40 °C, frequency of use 8760 h/a. All electronic failures are considered hazardous. For more information, see document no. 8015532.

### Performance

| | |
|---|---|
| **Number of steps per revolution (max. resolution)** | 262,144 (18 bit) |
| **Number of revolutions** | 4,096 (12 bit) |
| **Max. resolution (number of steps per revolution x number of revolutions)** | 18 bit x 12 bit (262,144 x 4,096) |
| **Error limits G** | 0.03° [1] |
| **Repeatability standard deviation $\sigma_r$** | 0.002° [2] |

[1] In accordance with DIN ISO 1319-1, position of the upper and lower error limit depends on the installation situation, specified value refers to a symmetrical position, i.e. deviation in upper and lower direction is the same.
[2] In accordance with DIN ISO 55350-13; 68.3% of the measured values are inside the specified area.

### Interfaces

| | |
|---|---|
| **Communication interface** | SSI |
| **Initialization time** | 50 ms [1] |
| **Position forming time** | < 1 µs |
| **Code type** | Gray |
| **Code sequence parameter adjustable** | CW/CCW (V/R) parameter adjustable |
| **Clock frequency** | ≤ 2 MHz [2] |
| **Set (electronic adjustment)** | H-active (L = 0 - 3 V, H = 4,0 - $U_s$ V) |
| **CW/CCW (counting sequence when turning)** | L-active (L = 0 - 1,5 V, H = 2,0 - Us V) |

[1] Valid positional data can be read once this time has elapsed.
[2] Minimum, LOW level (Clock +): 250 ns.

## Electronics

| | |
|---|---|
| **Connection type** | Cable, 8-wire, universal, 1.5 m [1] |
| **Supply voltage** | 4.5 ... 32 V |
| **Power consumption** | ≤ 0.7 W (without load) |
| **Reverse polarity protection** | ✓ |

[1] The universal cable connection is positioned so that it is possible to lay it without bends in a radial or axial direction.

## Mechanics

| | |
|---|---|
| **Mechanical design** | Solid shaft, Servo flange |
| **Shaft diameter** | 6 mm |
| **Shaft length** | 10 mm |
| **Characteristics of the shaft** | With flat |
| **Weight** | 0.3 kg [1] |
| **Shaft material** | Stainless steel |
| **Flange material** | Aluminum |
| **Housing material** | Aluminum die cast |
| **Start up torque** | < 0.5 Ncm (+20 °C) |
| **Operating torque** | < 0.3 Ncm (+20 °C) |
| **Permissible shaft loading** | 80 N (radial)<br>40 N (axial) |
| **Operating speed** | ≤ 9,000 $min^{-1}$ [2] |
| **Moment of inertia of the rotor** | 6.2 $gcm^2$ |
| **Bearing lifetime** | 3.0 x 10^9 revolutions |
| **Angular acceleration** | ≤ 500,000 $rad/s^2$ |

[1] Based on devices with male connector.
[2] Allow for self-heating of 3.3 K per 1,000 rpm when designing the operating temperature range.

## Ambient data

| | |
|---|---|
| **EMC** | According to EN 61000-6-2 and EN 61000-6-3 [1] |
| **Enclosure rating** | IP65, shaft side (IEC 60529)<br>IP67, housing side (IEC 60529) [2] |
| **Permissible relative humidity** | 90 % (Condensation not permitted) |
| **Operating temperature range** | –40 °C ... +100 °C [3] |
| **Storage temperature range** | –40 °C ... +100 °C, without package |
| **Resistance to shocks** | 60 g, 6 ms (EN 60068-2-27) |
| **Resistance to vibration** | 20 g, 10 Hz ... 2,000 Hz (EN 60068-2-6) |

[1] EMC according to the standards quoted is achieved if shielded cables are used.
[2] For devices with male connector: with mounted mating connector.
[3] Stationary position of the cable.

## Certificates

| | |
|---|---|
| **EU declaration of conformity** | ✓ |
| **UK declaration of conformity** | ✓ |
| **ACMA declaration of conformity** | ✓ |

| | |
|---|---|
| **Moroccan declaration of conformity** | ✓ |
| **China-RoHS** | ✓ |
| **cULus certificate** | ✓ |
| **Information according to Art. 3 of Data Act (Regulation EU 2023/2854)** | ✓ |

## Classifications

| | |
|---|---|
| **ECLASS 5.0** | 27270502 |
| **ECLASS 5.1.4** | 27270502 |
| **ECLASS 6.0** | 27270590 |
| **ECLASS 6.2** | 27270590 |
| **ECLASS 7.0** | 27270502 |
| **ECLASS 8.0** | 27270502 |
| **ECLASS 8.1** | 27270502 |
| **ECLASS 9.0** | 27270502 |
| **ECLASS 10.0** | 27270502 |
| **ECLASS 11.0** | 27270502 |
| **ECLASS 12.0** | 27270502 |
| **ETIM 5.0** | EC001486 |
| **ETIM 6.0** | EC001486 |
| **ETIM 7.0** | EC001486 |
| **ETIM 8.0** | EC001486 |
| **UNSPSC 16.0901** | 41112113 |

## Dimensional drawing

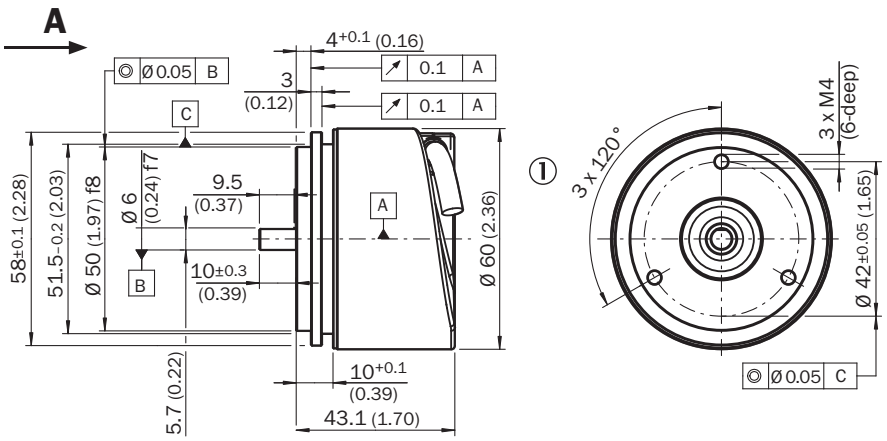


Dimensions in mm (inch)
① cable diameter = 5.6 mm +/- 0.2 mm bend radius = 30 mm

## Attachment specifications

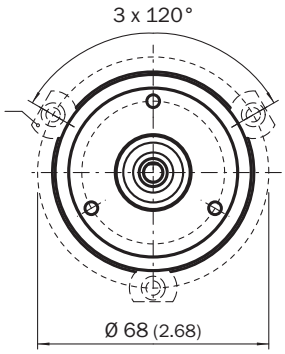


## Attachment specifications

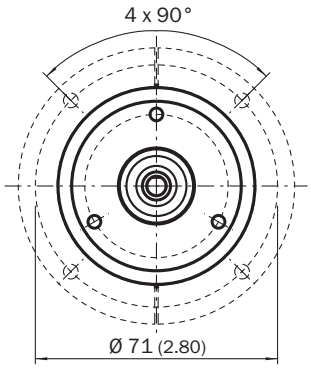


## PIN assignment

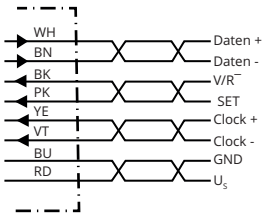


| PIN | Wire colors (cable connection) | Signal | Explanation |
|---|---|---|---|
| 1 | Brown | Data - | Interface signals |
| 2 | White | Data + | Interface signals |
| 3 | Black | V/R | Sequence in direction of rotation |
| 4 | Pink | SET | Electronic adjustmen-tInterface signals |
| 5 | Yellow | Clock + | Interface signals |
| 6 | Purple | Clock - | Interface signals |
| 7 | Blue | GND | Ground connection |
| 8 | Red | $U_S$ | Operating voltage |

| PIN | Wire colors (cable connection) | Signal | Explanation |
|---|---|---|---|
| – | – | Screen | Screen connected to housing on encoder side. Connected to ground on control side. |

## Diagrams

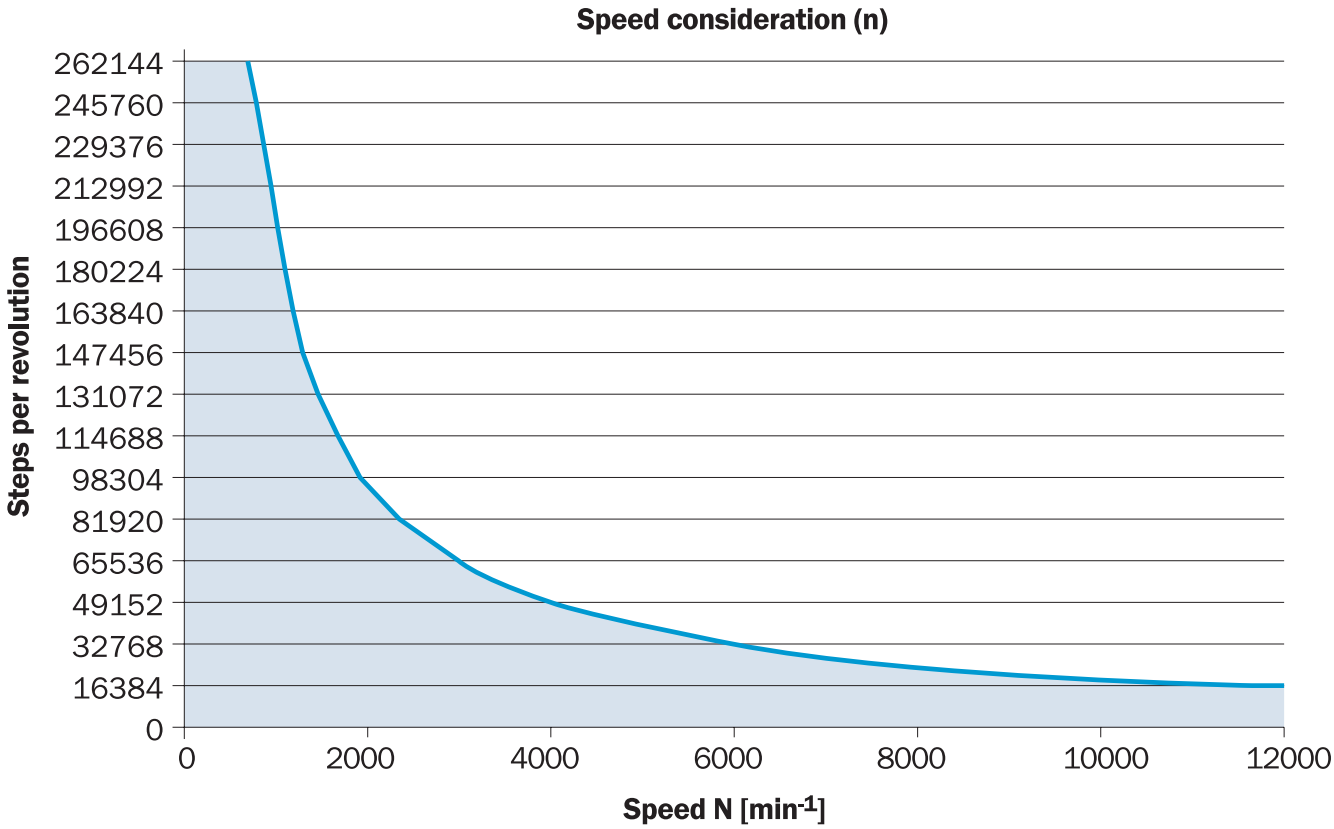


The maximum speed is also dependent on the shaft type.

## Recommended accessories

Other models and accessories ➜ www.sick.com/AFS_AFM60_SSI

| | Brief description | Type | part no. |
|---|---|---|---|
| shaft adaptation | | | |
|  | • **Product segment:** Shaft adaptation<br>• **Product:** Shaft couplings<br>• **Description:** Bellows coupling, shaft diameter 6 mm / 10 mm, maximum shaft offset: radial ± 0.25 mm, axial ± 0.4 mm, angular +/- 4°; max. speed 10,000 rpm, –30 °C to +120 °C, max. torque 120 Ncm; material: stainless steel bellows, aluminum hub | KUP-0610-B | 5312982 |
|  | • **Product segment:** Shaft adaptation<br>• **Product:** Shaft couplings<br>• **Description:** Double loop coupling, shaft diameter 6 mm / 10 mm, max. shaft offset: radially +/- 2,5 mm, axially +/-3 mm, angle +/- 10 degrees;max. speed 3.000 rpm, –30 to +80 degrees Celsius, torsional spring stiffness of 25 Nm/rad | KUP-0610-D | 5326697 |
|  | • **Product segment:** Shaft adaptation<br>• **Product:** Shaft couplings<br>• **Description:** Spring washer coupling, shaft diameter 6 mm / 10 mm, Maximum shaft offset: radial +/- 0.3 mm, axial +/- 0.4 mm, angular +/- 2.5°; max. speed 12,000 rpm, –10° to +80 °C, max. torque 60 Ncm; material: aluminum flange, glass fiber-reinforced polyamide membrane and hardened steel coupling pin | KUP-0610-F | 5312985 |
|  | • **Product segment:** Shaft adaptation<br>• **Product:** Shaft couplings<br>• **Description:** Bar coupling, shaft diameter 6 mm / 10 mm, max. shaft offset: radial ± 0,3 mm, axial ± 0,3 mm, angular ± 3°; max. speed 10.000 rpm, –10° to +80 °C, max. torque: 80 Ncm, material: fiber-glass reinforced polyamide, aluminum hub | KUP-0610-S | 2056407 |
|  | • **Product segment:** Shaft adaptation<br>• **Product:** Shaft couplings<br>• **Description:** Claw coupling, shaft diameter 6 mm / 10 mm, damping element 80 shore blue, maximum shaft offset: radial ± 0.22 mm, axial ± 1 mm angular ± 1.3°, max. speed 19,000 rpm, angle of twist max. 10°, –30 °C to +80 °C, max. torque 800 Ncm, tightening torque of screws: ISO 4029 150 Ncm, material: aluminum flange, damping element: polyurethane | KUP-0610-J | 2127056 |
|  | • **Product segment:** Shaft adaptation<br>• **Product:** Shaft couplings<br>• **Description:** Bellows coupling, shaft diameter 6 mm / 6 mm, maximum shaft offset: radial ± 0.25 mm, axial ± 0.4 mm, angular +/- 4°; max. speed 10,000 rpm, –30 °C to +120 °C, max. torque 120 Ncm; material: stainless steel bellows, aluminum hub | KUP-0606-B | 5312981 |
|  | • **Product segment:** Shaft adaptation<br>• **Product:** Shaft couplings<br>• **Description:** Cross-slotted coupling, shaft diameter 6 mm / 6 mm, maximum shaft offset: radial ± 0.3 mm, axial ± 0.2 mm, angle ± 3°; max. speed 10,000 rpm, –10° to +80 °C, max. torque 80 Ncm; material: fiber-glass reinforced polyamide, aluminum hub | KUP-0606-S | 2056406 |
|  | • **Product segment:** Shaft adaptation<br>• **Product:** Shaft couplings<br>• **Description:** Bar coupling, shaft diameter 6 mm /8 mm, maximum shaft offset radial ± 0.3 mm, axial ± 0.2 mm, angle ± 3°, max. speed 10,000 rpm, torsion spring rigidity 38 Nm/wheel; material: fiber-glass reinforced polyamide, aluminum hub | KUP-0608-S | 5314179 |
| Mounting systems | | | |
|  | • **Description:** Servo clamps, large, for servo flange (clamps, eccentric fastener), 3 pcs, without mounting material<br>• **Items supplied:** Without mounting hardware | BEF-WK-SF | 2029166 |

| | Brief description | Type | part no. |
|---|---|---|---|
| programming devices | | | |
|  | • **Product segment:** Programming devices<br>• **Product family:** PGT-10 Pro<br>• **Description:** Programming unit display for programmable SICK DFS60, DFV60, AFS/AFM60, AHS/AHM36 encoders, and wire draw encoder with DFS60, AFS/AFM60 and AHS/AHM36. Compact dimensions, low weight, and intuitive operation.<br>• **Items supplied:** 1 x PGT-10-Pro stand-alone programming tool,4 x alkaline type batteries, 1.5 V Mignon (AA) | PGT-10-Pro | 1072254 |
|  | • **Product segment:** Programming devices<br>• **Product family:** PGT-08-S<br>• **Description:** USB programming unit, for programmable SICK encoders AFS60, AFM60, DFS60, VFS60, DFV60 and wire draw encoders with programmable encoders | PGT-08-S | 1036616 |
| connectors and cables | | | |
|  | • **Connection type head A:** Male connector, M23, 12-pin, straight, A-coded<br>• **Signal type:** HIPERFACE®, SSI, Incremental, RS-422<br>• **Description:** HIPERFACE®, shieldedSSIIncrementalRS-422<br>• **Connection systems:** Solder connection | STE-2312-G | 6027537 |
| 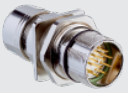 | • **Connection type head A:** Male connector, M23, 12-pin, straight, A-coded<br>• **Signal type:** HIPERFACE®, SSI, Incremental<br>• **Description:** HIPERFACE®, shieldedSSIIncremental<br>• **Connection systems:** Solder connection | STE-2312-GX | 6028548 |
|  | • **Connection type head A:** Male connector, M23, 12-pin, straight, A-coded<br>• **Signal type:** HIPERFACE®, SSI, Incremental<br>• **Description:** HIPERFACE®, shieldedSSIIncremental<br>• **Connection systems:** Solder connection | STE-2312-G01 | 2077273 |
|  | • **Connection type head A:** Male connector, M12, 8-pin, straight, A-coded<br>• **Signal type:** Incremental<br>• **Cable:** CAT5, CAT5e<br>• **Description:** Incremental, shielded<br>• **Connection systems:** IDC quick connection<br>• **Permitted cross-section:** 0.14 mm² ... 0.34 mm² | STE-1208-GA01 | 6044892 |
|  | • **Connection type head A:** Female connector, terminal box, 8-pin, straight<br>• **Connection type head B:** Male connector, D-Sub, 9-pin, straight<br>• **Signal type:** SSI + incremental<br>• **Cable:** 0.5 m, 4-wire, PVC<br>• **Description:** SSI + incremental, shielded<br>• **Note:** Programming adapter cable for programming tool PGT-10-Pro and PGT-08-S | DSL-0D08-G0M5AC3 | 2061739 |

# SICK AT A GLANCE

SICK is one of the leading manufacturers of intelligent sensors and sensor solutions for industrial applications. A unique range of products and services creates the perfect basis for controlling processes securely and efficiently, protecting individuals from accidents and preventing damage to the environment.

We have extensive experience in a wide range of industries and understand their processes and requirements. With intelligent sensors, we can deliver exactly what our customers need. In application centers in Europe, Asia and North America, system solutions are tested and optimized in accordance with customer specifications. All this makes us a reliable supplier and development partner.

Comprehensive services complete our offering: SICK LifeTime Services provide support throughout the machine life cycle and ensure safety and productivity.

**For us, that is “Sensor Intelligence.”**

# WORLDWIDE PRESENCE:

Contacts and other locations –www.sick.com