CAT4238AEVB

CAT4238 10-LED Boost Converter Evaluation Board User's Manual

ON Semiconductor®

http://onsemi.com

EVAL BOARD USER'S MANUAL

Introduction

This document describes the CAT4238AGEVB Evaluation Board for the ON Semiconductor CAT4238 High Efficiency 10-LED Boost Converter. The functionality and major parameters of the CAT4238 can be evaluated with the CAT4238AGEVB board.

The CAT4238 is a high voltage CMOS constant-current DC/DC converter that has been designed to drive with high efficiency white or other high brightness LEDs. The high-voltage output stage allows driving up to 10 white LEDs in series. A single external resistor sets the LED current between 5 mA and 40 mA. LED current can be adjusted using either a pulse width modulated (PWM) signal or a DC voltage. Detailed descriptions and electrical characteristics are in the CAT4238 data sheet.

CAT4237EVAL2 Board Hardware

The evaluation board contains a CAT4238 DC-DC boost converter in a typical application circuit. As configured, the board circuit is set to drive up to 10 white LEDs in series. The user can chose to connect the CAT4238 output to the on-board LEDs string or to an external LEDs string from an application.

The board provides the option to connect a different number of LEDs available on board, 8, 9 or 10, using a jumper shunt for one of the J2 to J4 connectors. The board schematic is shown in Figure 1.

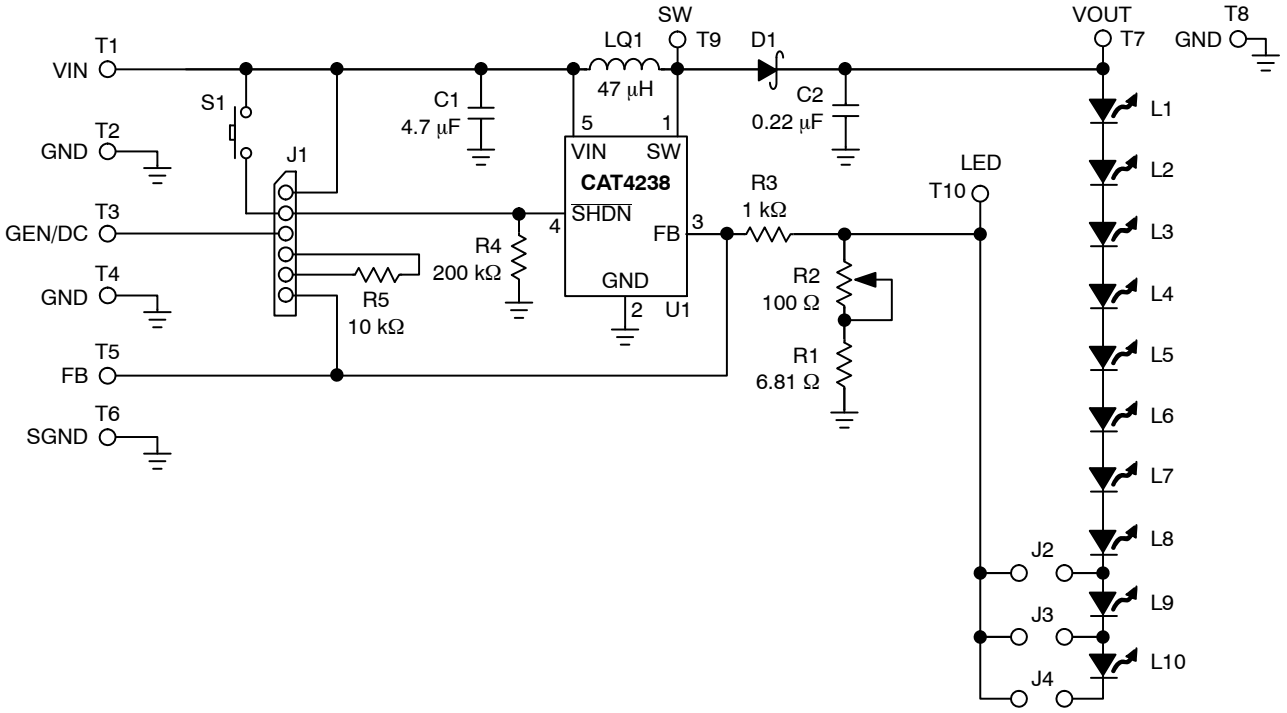

Figure 1. CAT4238AEVB Board Schematic

© Semiconductor Components Industries, LLC, 2011

The board is powered from an external voltage applied to the V_{IN} (T1) pad. The circuit is delivered with no LEDs soldered on board. The user can solder his white LEDs on the CAT4138 board (8 to 10 LED string pads layout provided) or he can choose to connect the LEDs from his application between V_{OUT} (T7) and LED (T10) test points.

The LED current is set through the external resistors connected to the FB pin (R1, R2). Using the variable resistor R2, the LED current can be set from 3 mA to 40 mA. Most white LEDs are driven at a maximum current between 15 mA and 20 mA to ensure a pure “white” light.

The board also demonstrates the CAT4238 shutdown mode and LED brightness control by using an external PWM signal or a DC voltage. Resistors R3 and R5 (R5 – soldered on board by the user) are used to adjust the LED current using the dimming control with an external applied DC voltage on the FB pin. The ON/OFF operation and dimming control can be selected using the jumper options for the J1 connector.

Test points T1 to T10 are available to apply the external voltages/signal generator or to measure the output voltages/signals provided by CAT4238.

The component placement is shown in Figure 2. Table 1 presents the component list for this evaluation board.

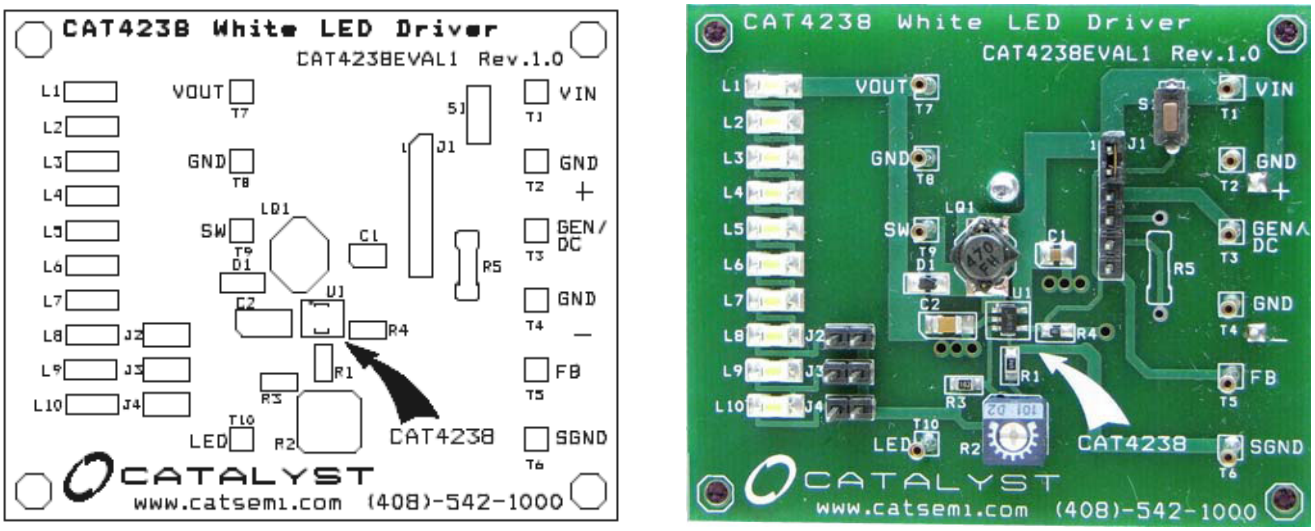

Figure 2. CAT4238AEVB Board

Table 1. CAT4238AGEVB BOARD LIST OF COMPONENTS

Name	Manufacturer	Description	Part Number	Units
U1	ON Semiconductor	CMOS White LED Driver, TSOT23 - 5pin	CAT4238TD-G	1
C1	Taiyo Yuden (or Panasonic)	Ceramic Capacitor 4.7 μF/6.3 V, X5R, Size 0805	JMK212BJ475 (or Digi-Key PCC2315CT-ND)	1
C2	Taiyo Yuden (or Kemet)	Ceramic Capacitor 0.22 μF/50 V, X5R(X7R)	UMK212BJ224KG (Digi-Key 587-1287-1-ND)	1
L1	Sumida	Inductor 47 μH, Low DCR, High Current	CDC5D23B-470 (or CDR6D23MN-470)	1
D1	Central Semi	Schottky Diode, Low VF, 40 V, 500 mA, SOD-323	CMDSH05-4	1
R1	Yageo	SMT Resistor 1/16 W, 6.81 Ω, 0603	Digi-Key 311-6.81HCT-ND	1
R2	Bourns	Trimmer Pot, 1/4”, 100 Ω	3329W-101-ND (or equiv)	1
R3	Yageo	SMT Resistor 1/16 W, 1.0 kΩ, 0603	Digi-Key 311-1.0KHCT-ND	1
R4	Yageo	SMT Resistor 1/16 W, 200 kΩ, 0603	Digi-Key 311-200KHCT-ND	1
R5	Yageo	Metal Film Resistor 1/16W, 10kΩ (Not Soldered on Board)	Digi-Key 10.0KXBK-ND	
L1 to L10	Nichia	White LED, SMT (Optional)	NSCW100 or NSCW335	10
J1		6-pin Header Connector, 0.1”, Single Strip	Digi_Key S1012-06-ND (or equiv)	1
J2 to J4		2-pin Header Connector, 0.1”, Single Strip (optional)	Digi_Key S1012-02-ND (or equiv)	3
T1 to T10	Mil-Max	Pin Receptacle (Test Points)	#0149-0-15-01-30-14-04-0 (or equiv)	10

CAT4238 EVALUATION

The CAT4238AGEVB gives the user a way to evaluate the CAT4238 in a typical application of driving multiple LEDs.

The following steps are an example of how the user can evaluate the CAT4238 white LED driver:

Driving 10 LEDs in series and Shutdown Mode

1. Connect the 10-LED string to the CAT4238 output through J4 header pin connector
2. Set the R2 potentiometer to the middle position
3. Apply the external voltage supply, Vext (3.0 V < V_{IN} < 5 V) between V_{IN} (T1) and GND (T2)
4. The CAT4238 is in the **shutdown mode** (SHDN pin is connected to GND) if the J1 connector (Pin #1 – Pin #2) is not jumpered
   - Connect a current meter between Vext and V_{IN} pad to measure the shutdown current: I_{SD} << 1 μA
   - n this mode of operation the LEDs are disconnected from the output: LEDs are OFF
5. Connect SHDN pin of CAT4238 to VIN using a jumper shunt between Pin #1 and Pin #2 of J1 connector
   - Observe that LEDs are ON

LED Current Evaluation

1. Programming LED current

LED current is programmed using the external resistors, RSET = R1 + R2, connected to the FB pin. The voltage at the FB pin is internally regulated to the value V_{FB} = 300 mV ±15 mV.

The current into the LED pin can be set according to the following equation:

$$I_{LED}(mA) = \frac{V_{FB}(mV)}{RSET(\Omega)} = \frac{V_{FB}}{R1 + R2}$$

- Set the input voltage: ex. V_{IN} = 3.6 V
- Disconnect the jumper from the J4, connector and insert a current meter between these pins to monitor the LED current, I_{LED}
- Rotate the potentiometer R2 and observe the I_{LED} value on the current meter. The current can be adjusted between 3 mA and 30 mA, approximately. Various LED current values and the associated RSET values are listed below:

I_{LED} (mA)	R_{SET} (Ω)
5	59
10	29.8
15	20
20	15
25	12
30	10

- Monitor the voltage on FB (T5), V_{OUT} (T7), and SW (T9)
- Verify the internal switch frequency (fsw = 1.0 MHz typically) using a scope probe connected on SW (T9) test point (GND = T8)

Figure 3 shows the internal switch output, Vsw (DC coupled, 5 V/div) and the regulated voltage on FB pin, V_{FB} (DC, 500 mV/div) for V_{IN} = 3.6 V, I_{LED} = 20 mA, 10 LEDs in series connected to the CAT4238 output.

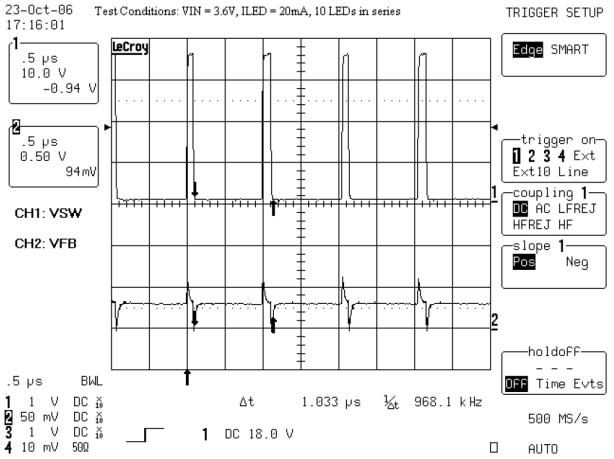

Figure 3. Internal Switch Output and Regulated V_{FB} Voltage Waveforms (I_{LED} = 20 mA, V_{IN} = 3.6 V)

2. Evaluating LED current regulation versus the input voltage, VIN
   - Set the I_{LED} to a programmed value using the R2 potentiometer (i.e. 10 mA, 20 mA, 30 mA for V_{IN} = 3.6 V)
   - For any I_{LED} value vary the V_{IN} voltage between 3.0 V and 5.5 V
   - Observe the value of I_{LED} measured by the current meter and V_{FB} using a voltmeter. Figure 4 presents the I_{LED} current versus V_{IN}. Figure 5 shows the CAT4238 FB voltage versus input voltage.

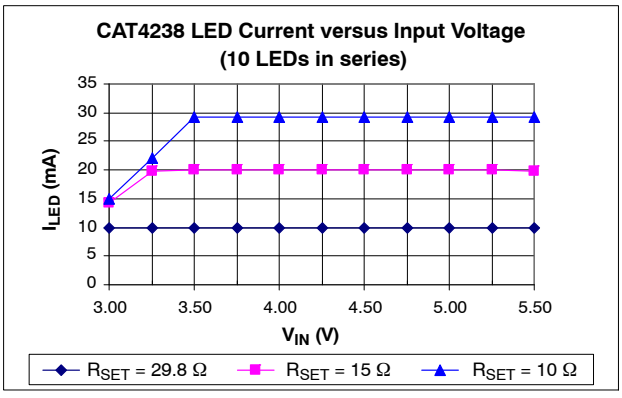

Note: R_{SET} = R1 + R2

Figure 4. LED Current Line Regulation

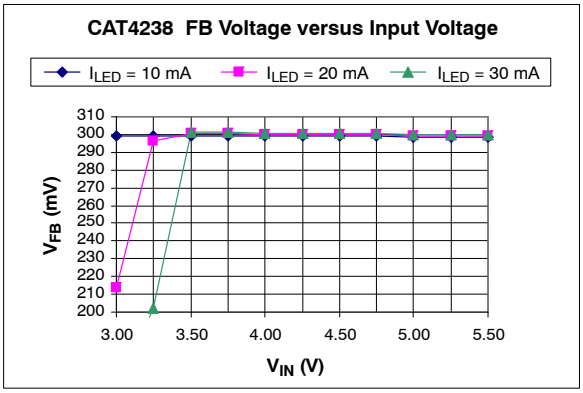

Figure 5. V_{FB} Voltage Line Regulation

Efficiency Evaluation

The efficiency is evaluated according to the following equation:

$$Efficiency\ (\%) = \frac{I_{LED} \times \Sigma VFi}{I_{IN} \times V_{IN}} \times 100$$

where $\Sigma VFi = V_{OUT} - V_{LED}$, V_{LED} is the voltage measured on LED (T10) test point.

1. Insert a current meter, CM1, between input supply voltage, Vext, and V_{IN} pad to monitor the input current, I_{IN} (or use an embedded power supply current meter)
2. Set the input voltage for V_{IN} = 3.6 V
3. Adjust the R2 potentiometer for the I_{LED} = 5 mA. Observe the I_{LED} current on the meter, CM2, inserted between Pin #1 and Pin #2 of J4 connector
4. Measure the I_{IN} current on CM1
5. Monitor the output voltage on V_{OUT} (T7) and V_{LED} voltage on LED (T10) test points
6. Repeat steps 3 to 5 for I_{LED} = 10 mA, 15 mA, 20 mA, 25 mA and 30 mA

Figure 6 shows the efficiency measured for 2 values of input voltage, V_{IN} = 3.6 V and V_{IN} = 4.2 V, with 10 LEDs in series connected to the CAT4238 output.

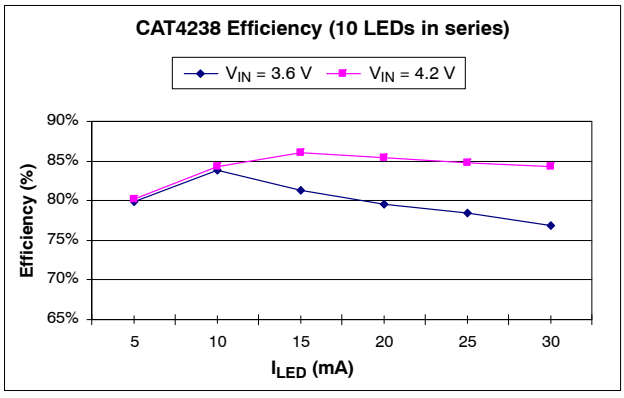

Figure 6. CAT4238 Efficiency Driving 10 LEDs in Series

Dimming Control

The LED brightness control can be accomplished by using a PWM signal applied to the SHDN pin or to the FB pin. The other method is to use a variable DC voltage applied through a resistor to FB pin.

1. Dimming using a **PWM signal on the SHDN pin**

The LEDs are turned off and on at the PWM frequency. The average current changes with the duty cycle. Increasing the duty cycle will increase the LED brightness. The peak current value sets the light spectrum.

- Connect the jumper shunt between Pin #2 and Pin #3 of the J1 connector
- Apply a pulse signal generator to the GEN/DC (T3) pad; Frequency = 200 Hz to 2 kHz; Amplitude 0 V to 3 V for V_{IN} = 3.6 V
- Modify the duty cycle between 0% and 100%
- Observe the average current through LEDs measured by a current meter inserted at J4 connector. For 0% duty cycle, the I_{LED} will be off (I_{LED} = 0 mA); At the maximum duty cycle, the LED will be driven at the maximum current set by the R2 potentiometer
- Monitor the FB voltage compared with the PWM signal applied on SHDN input

Figure 7 shows the voltage monitored on the FB pin, V_{FB} (CH2) using a PWM signal applied to the SHDN pin (CH1). The frequency of the PWM signal is 2 kHz approximately.

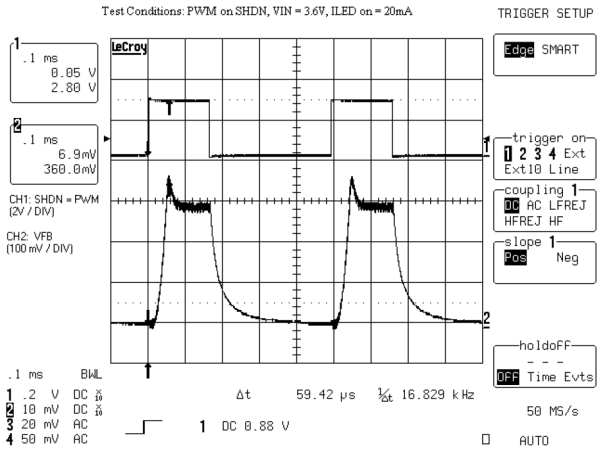

Figure 7. FB Voltage Waveform with PWM

2. Dimming using a **DC voltage applied to the FB pin**

TA variable external DC voltage is applied on FB pin to adjust the LED current. As the DC voltage is increased, the voltage drop on resistor R3 is increased and the voltage drop on RSET = R1+R2 is decreased, thus the LED current decreases. The external DC voltage is applied to FB pin through a series resistor, R5, which sets the maximum DC voltage.

Also, a filtered PWM signal can be considered as a variable DC voltage.

- Connect the SHDN pin to V_{IN}: jumper shunt between Pin #1 and Pin #2 of J1 connector
- Set the I_{LED} current (i.e. $I_{LED\ MAX}$ = 20 mA)
- Connect the GEN/DC to FB pin through R5 resistor using one jumper between Pin #3 and Pin #4 and another jumper shunt between Pin #5 and Pin #6 of J1 connector
- Apply the variable DC voltage between GEN/DC (T3) and GND (T4)
- Increase the DC voltage value (from 0V to V_{MAX} = 3.2 V)
- Observe the I_{LED} current decreases from the $I_{LED\ MAX}$ (20 mA – previous set) to $I_{LED\ MIN}$ (0 mA for V_{MAX} = 3.2 V with the existing resistors values, R3 = 1 kΩ, R5 = 10 kΩ).

onsemi, ONSEMI, and other names, marks, and brands are registered and/or common law trademarks of Semiconductor Components Industries, LLC dba "**onsemi**" or its affiliates and/or subsidiaries in the United States and/or other countries. **onsemi** owns the rights to a number of patents, trademarks, copyrights, trade secrets, and other intellectual property. A listing of **onsemi**'s product/patent coverage may be accessed at www.onsemi.com/site/pdf/Patent−Marking.pdf. **onsemi** is an Equal Opportunity/Affirmative Action Employer. This literature is subject to all applicable copyright laws and is not for resale in any manner.

The evaluation board/kit (research and development board/kit) (hereinafter the "board") is not a finished product and is not available for sale to consumers. The board is only intended for research, development, demonstration and evaluation purposes and will only be used in laboratory/development areas by persons with an engineering/technical training and familiar with the risks associated with handling electrical/mechanical components, systems and subsystems. This person assumes full responsibility/liability for proper and safe handling. Any other use, resale or redistribution for any other purpose is strictly prohibited.

THE BOARD IS PROVIDED BY ONSEMI TO YOU "AS IS" AND WITHOUT ANY REPRESENTATIONS OR WARRANTIES WHATSOEVER. WITHOUT LIMITING THE FOREGOING, ONSEMI (AND ITS LICENSORS/SUPPLIERS) HEREBY DISCLAIMS ANY AND ALL REPRESENTATIONS AND WARRANTIES IN RELATION TO THE BOARD, ANY MODIFICATIONS, OR THIS AGREEMENT, WHETHER EXPRESS, IMPLIED, STATUTORY OR OTHERWISE, INCLUDING WITHOUT LIMITATION ANY AND ALL REPRESENTATIONS AND WARRANTIES OF MERCHANTABILITY, FITNESS FOR A PARTICULAR PURPOSE, TITLE, NON−INFRINGEMENT, AND THOSE ARISING FROM A COURSE OF DEALING, TRADE USAGE, TRADE CUSTOM OR TRADE PRACTICE.

onsemi reserves the right to make changes without further notice to any board.

You are responsible for determining whether the board will be suitable for your intended use or application or will achieve your intended results. Prior to using or distributing any systems that have been evaluated, designed or tested using the board, you agree to test and validate your design to confirm the functionality for your application. Any technical, applications or design information or advice, quality characterization, reliability data or other services provided by **onsemi** shall not constitute any representation or warranty by **onsemi**, and no additional obligations or liabilities shall arise from **onsemi** having provided such information or services.

onsemi products including the boards are not designed, intended, or authorized for use in life support systems, or any FDA Class 3 medical devices or medical devices with a similar or equivalent classification in a foreign jurisdiction, or any devices intended for implantation in the human body. You agree to indemnify, defend and hold harmless **onsemi**, its directors, officers, employees, representatives, agents, subsidiaries, affiliates, distributors, and assigns, against any and all liabilities, losses, costs, damages, judgments, and expenses, arising out of any claim, demand, investigation, lawsuit, regulatory action or cause of action arising out of or associated with any unauthorized use, even if such claim alleges that **onsemi** was negligent regarding the design or manufacture of any products and/or the board.

This evaluation board/kit does not fall within the scope of the European Union directives regarding electromagnetic compatibility, restricted substances (RoHS), recycling (WEEE), FCC, CE or UL, and may not meet the technical requirements of these or other related directives.

FCC WARNING − This evaluation board/kit is intended for use for engineering development, demonstration, or evaluation purposes only and is not considered by **onsemi** to be a finished end product fit for general consumer use. It may generate, use, or radiate radio frequency energy and has not been tested for compliance with the limits of computing devices pursuant to part 15 of FCC rules, which are designed to provide reasonable protection against radio frequency interference. Operation of this equipment may cause interference with radio communications, in which case the user shall be responsible, at its expense, to take whatever measures may be required to correct this interference.

onsemi does not convey any license under its patent rights nor the rights of others.

LIMITATIONS OF LIABILITY: **onsemi** shall not be liable for any special, consequential, incidental, indirect or punitive damages, including, but not limited to the costs of requalification, delay, loss of profits or goodwill, arising out of or in connection with the board, even if **onsemi** is advised of the possibility of such damages. In no event shall **onsemi**'s aggregate liability from any obligation arising out of or in connection with the board, under any theory of liability, exceed the purchase price paid for the board, if any.

The board is provided to you subject to the license and other terms per **onsemi**'s standard terms and conditions of sale. For more information and documentation, please visit www.onsemi.com.

ADDITIONAL INFORMATION

TECHNICAL PUBLICATIONS:
Technical Library: www.onsemi.com/design/resources/technical−documentation
onsemi Website: www.onsemi.com

ONLINE SUPPORT: www.onsemi.com/support
For additional information, please contact your local Sales Representative at www.onsemi.com/support/sales