

Ultrasonic sensor

UC2000-L2-E4-V15

- Sensor head bidirectional and rotatable
- Function indicators visible from all directions
- Quick mounting bracket
- Selectable sound lobe width
- Programmable

Single head system

Dimensions

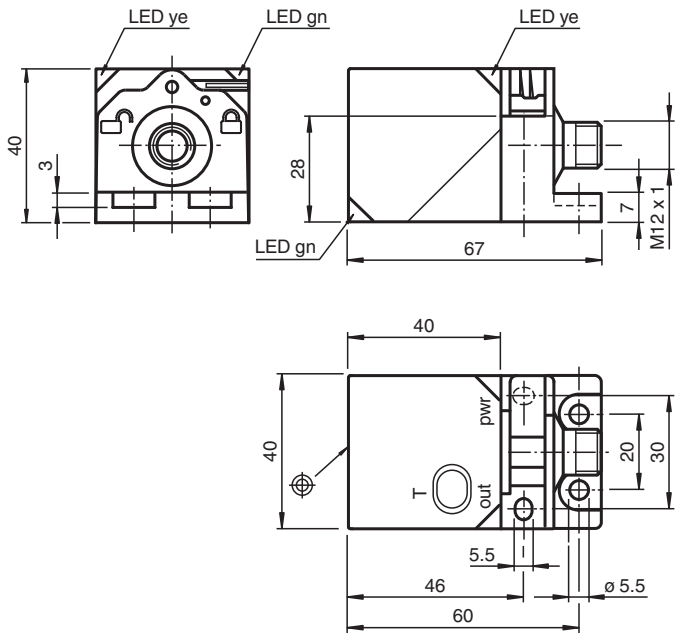

Technical Data

General specifications		
Sensing range		60 ... 2000 mm
Adjustment range		80 ... 2000 mm
Dead band		0 ... 60 mm
Standard target plate		100 mm x 100 mm
Transducer frequency		approx. 175 kHz
Nominal ratings		
Response delay		minimum: 60 ms factory setting: 120 ms
Time delay before availability	t_v	≤ 1600 ms
Indicators/operating means		
LED green		Operating display
LED yellow		switching state

Release date: 2025-06-24 Date of issue: 2025-06-24 Filename: 277763_eng.pdf

Technical Data

LED red		error
Electrical specifications		
Operating voltage	U_B	10 ... 30 V DC , ripple 10 $\%_{SS}$
No-load supply current	I_0	≤ 50 mA
Interface		
Interface type		Serial interface (programming adapter required) 9600 BPS, no parity, 8 data bits, 1 stop bit
Input/Output		
Input/output type		1 synchronization connection, bidirectional
0 Level		0 ... 1 V
1 Level		4 V ... U_B
Input impedance		> 12 kΩ
Output current		< 12 mA
Pulse length		0.5 ... 300 ms (level 1)
Pulse interval		≥ 33 ms (level 0)
Synchronization frequency		
Common mode operation		≤ 30 Hz
Multiplex operation		≤ 33 Hz / n , n = number of sensors , n ≤ 10 (factory setting: n = 5)
Input		
Input type		1 program input
Level (switch point 1)		0 ... 1 V
Level (switch point 2)		4 V ... U_B
Input impedance		> 10 kΩ
Pulse length		2 ... 10 s
Output		
Output type		1 switching output E4, NPN, NO/NC, programmable
Rated operating current	I_e	200 mA , short-circuit/overload protected
Voltage drop	U_d	≤ 2 V
Repeat accuracy		≤ 0.1 % of full-scale value
Switching frequency	f	≤ 5 Hz
Range hysteresis	H	programmable , preset to 1 mm
Temperature influence		< 1.5 % of full-scale value
Compliance with standards and directives		
Standard conformity		
Standards		EN IEC 60947-5-2:2020 IEC 60947-5-2:2019
Approvals and certificates		
UL approval		cULus Listed, Class 2 Power Source
CCC approval		CCC approval / marking not required for products rated ≤36 V
Ambient conditions		
Ambient temperature		-25 ... 70 °C (-13 ... 158 °F)
Storage temperature		-40 ... 85 °C (-40 ... 185 °F)
Mechanical specifications		
Connection type		Connector plug M12 x 1 , 5-pin
Degree of protection		IP67
Material		
Housing		PA-GF35
Transducer		epoxy resin/hollow glass sphere mixture; polyurethane foam
Mass		115 g
Dimensions		
Height		40 mm
Width		40 mm
Length		40 mm

Release date: 2025-06-24 Date of issue: 2025-06-24 Filename: 277763_eng.pdf

Technical Data

Factory settings		
Output		near switch point: 80 mm far switch point: 2000 mm output function: Window mode output behavior: NO contact
Beam width		wide
Evaluation procedure		averaging (MxN) M = 5 N = 2
General information		
Supplementary information		Switch settings of the external programming adapter: "output load": pull-up "output logic": inv

Connection Assignment

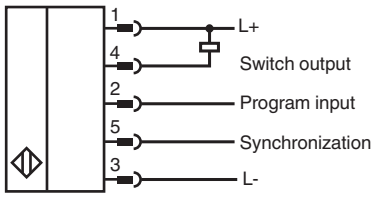

Connection Assignment

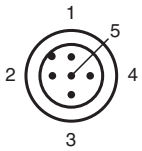

Wire colors in accordance with EN 60947-5-2

1	BN	(brown)
2	WH	(white)
3	BU	(blue)
4	BK	(black)
5	GY	(gray)

Release date: 2025-06-24 Date of issue: 2025-06-24 Filename: 277763_eng.pdf

Characteristic Curve

Characteristic response curve

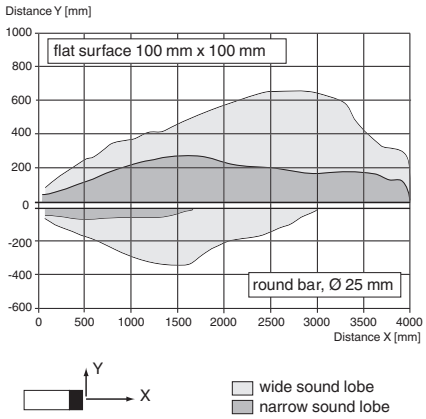

Release date: 2025-06-24 Date of issue: 2025-06-24 Filename: 277763_eng.pdf

Programming

Programming procedure

The sensor features a single output with two programmable switch points. Programming the switch points and the operating mode can be done in three different ways:

- via the sensor's Programming Button
- by applying the supply voltage 0 V or +U_B to the Program input (only for programming the switch points)
- via the serial interface, which requires an external interface adapter

Procedures for programming via the sensor's Programming Button and the Program input are described below. For programming using the serial interface, please refer to the software manual. Switch points and operating modes can be programmed independently without influencing each other

Note:

- Programming is enabled for 5 minutes after power-on. After 5 minutes without programming activity the programming feature will be locked.
- During any programming step it is possible to leave the programming routine without changing the sensor settings by pressing the Programming Button for 10 s.

Programming the Switch Points

Note:

If the red LED flashes during the programming procedure, it indicates uncertain target detection. In this case, please correct the target alignment until the yellow LED flashes. The new settings will only be stored in the sensor's memory if the yellow LED flashes.

Programming Switch Points using the Internal Programming Button

Programming the Near Switch Point

1. Place the target at the desired near switch point position
2. Press the Programming Button for 2 s (yellow LED flashes)
3. Press the Programming Button briefly (green LED flashes three times for confirmation). The sensor returns to normal operation.

Programming of the Far Switch Point

1. Place the target at the desired far switch point position
2. Press the Programming Button for 2 s (yellow LED flashes)
3. Press the Programming Button for 2 s (green LED flashes three times for confirmation). The sensor returns to normal operation.

Programming Switch Points by using the Program input wire

Notes:

- Before entering program mode the program input wire must be open circuit for at least 2s.
- If potential (0V or +U_B) is applied for >10 s the sensor resumes normal operation without changing settings. To ensure successful programming, disconnect the Program input before this 10 s time period elapses.
- If the program input is not used, the wire should be connected to 0 V.
- If programming adapter UB-PROG2 is used for the programming procedure, button A1 is assigned to 0 V and button A2 is assigned to +U_B. Please make sure, that the cordset's wire, which is connected to the Program input is not connected (open circuit).

Programming the Near Switch Point

1. Place the target at the desired near switch point position
2. Apply 0 V to the Program input for 2 s (yellow LED flashes, then green LED flashes three times for confirmation). Then sensor returns to normal operation.

Programming the Far Switch Point

1. Place the target at the desired far switch point position
2. Apply +U_B to the Program input for 2 s (yellow LED flashes, then green LED flashes three times for confirmation). Then sensor returns to normal operation.

Programming Modes of Operation

The sensor provides a three step routine to program the modes of operation. In this routine you can program:

1. Output function
2. Output behavior
3. Beam width

Programming the modes is carried out sequentially. To toggle from one mode to the next, press the Programming Button for 2 s.

Press the Programming Button for 5 s to enter the operating modes programming routine.

Programming the output function

1. The green LED flashes. The number of flashes indicates the current output function:
   single flash: Switch point output function
   double flash: Window output function
   triple flash: Hysteresis output function.
2. Press the Programming Button briefly to toggle sequentially through these output functions and select the desired mode.
3. Press the Programming Button for 2 s to save and enter the programming routine for output behavior

Programming the output behavior

1. The yellow LED flashes. The number of flashes indicates the current output behavior:

Release date: 2025-06-24 Date of issue: 2025-06-24 Filename: 277763_eng.pdf

single flash: Normally Open (NO)
double flash: Normally Closed (NC).
2. Press the Programming Button briefly to toggle sequentially through these output behaviors and select the desired mode.
3. Press the Programming Button for 2 s to save and enter the programming routine for beam width.

Programming the beam width

1. The red LED flashes. The number of flashes indicates the current beam width setting:
single flash: narrow
double flash: medium
triple flash: wide.
2. Press the Programming Button briefly to toggle sequentially through these beam shapes.
3. Press the Programming Button for 2 s to save and exit the operating modes programming routine.

Factory Setting

Reset Sensor to Factory Settings

The sensor has a feature to reset to factory settings

1. Disconnect the sensor from power supply
2. Press and hold the Programming Button
3. Connect Sensor to power supply (yellow and red LED flash simultaneously for 5 s then yellow and green LED flash simultaneously)
4. Release Programming Button

The sensor now operates with default factory settings.

Factory settings

See technical data.

Indication

The sensor is provided with three LEDs to indicate various conditions.

	Green LED	Yellow LED	Red LED
During Normal operation			
Proper operation	On	Switching state remains in previous state	Off
Interference (e.g. compressed air)	Off		On
During Switch Point Programming			
Object detected	Off	Flashing	Off
No object detected	Off	Off	Flashing
Confirmation after Programming	Triple flashing	Off	Off
Programming failed warning	Off	Off	Triple flashing
During Sensor Mode Programming			
Programming the output function	Flashing	Off	Off
Programming the output behaviour	Off	Flashing	Off
Programming the beam width	Off	Off	Flashing

Commissioning

Synchronization

This sensor features a synchronization input for suppressing ultrasonic mutual interference ("cross talk"). If this input is not connected, the sensor will operate freewheeling using internally generated clock pulses. It can be synchronized by applying an external square wave or by means of appropriate programming via the serial interface. Each falling edge of the synchronization pulse triggers transmission of a single ultrasonic pulse. If the synchronization signal remains low for ≥ 1 second, the sensor will revert to normal operating mode. Normal operating mode can also be activated by opening the signal connection to the synchronization input.(See note below)
If the synchronization input goes to a high level for > 1 second, the sensor will switch to standby mode, indicated by the green LED. In this mode, the output(s) will remain in the last valid output state. When using the external synchronization feature, please refer to the software description.

Note:

If the option for synchronization is not used, the synchronization input has to be connected to ground (0V) or the sensor has to be operated via a V1 cordset (4-pin).
The synchronization function cannot be activated during programming mode and vice versa.

The following synchronization modes are possible:

1. Several sensors (max. number see technical data) can be synchronized together by interconnecting their respective synchronization inputs. In this case, each sensor alternately transmits ultrasonic pulses in a self multiplexing mode. No two sensors will transmit pulses at the same time. (See note below)
2. Several sensors (max. number see technical data) can be synchronized together by interconnecting their respective synchronization inputs. Due to programming via the sensors interface one sensor acts as a master device, all the others as slave devices. (see description of the interface) In this master / slave mode the sensors are triggered in parallel and are synchronized by a common synchronization pulse, provided by the master device.
3. Multiple sensors can be controlled by the same external synchronization signal. In this mode the sensors are triggered in parallel and are synchronized by a common external synchronization pulse. All sensors must be parameterized for external synchronization by means of the sensor interface. See software description.
4. A separate synchronization pulse can be sent to each individual sensor. In this mode the sensors operate in external multiplex mode. (See

Release date: 2025-06-24 Date of issue: 2025-06-24 Filename: 277763_eng.pdf

note below). All sensors must be parameterized for external synchronization by means of the sensor interface. See software description.

5. A high level (+U_B) or a low level (-U_B)on the synchronization input switches the sensor to standby mode if it is parameterized for external synchronization.

Note:

Sensor response times will increase proportionally to the number of sensors that are in the synchronization string. This is a result of the multiplexing of the ultrasonic transmit and receive signal and the resulting increase in the measurement cycle time.

Note:

The sensors syncronization input delivers an output current in case of low level and burdens with its input impedance in case of high level. Please pay attention that the synchronizing device needs to have that driver capability:
driver current against +U_B ≥ n * high-level/input impedance (n = number of sensors to be synchronized)
driver current against 0V ≥ n * output current (n = number of sensors to be synchronized).

Release date: 2025-06-24 Date of issue: 2025-06-24 Filename: 277763_eng.pdf