Pushing Performance
Since 1945

har-modular Spacer 5 module female str.



Image is for illustration purposes only. Please refer to product description.

Part number	02 52 900 0004
Specification	har-modular Spacer 5 module female str.
HARTING eCatalogue	https://b2b.harting.com/02529000004

Identification

Category	Connectors
Series	har-modular®
Identification	P spacer
Element	Female connector
Description of the contact	Straight Empty module

Version

Width of the module	5.08 mm
Connection type	Motherboard to daughtercard Mezzanine
Details	Pluggable with male connector

Technical characteristics

Insulation resistance	>10^{11} Ω
Limiting temperature	-55 ... +125 °C
Mating cycles	≥500
Isolation group	I (600 ≤ CTI)
Hot plugging	No
Moisture Sensitivity Level (MSL)	1 acc. to ECA/IPC/JEDEC J-STD-020D

Material properties

Material	Polyamide (PA)
Colour	Black

HARTING Electronics GmbH | Marienwerderstraße 3 | 32339 Espelkamp | Germany
Phone +49 5772 47-97200 | electronics@HARTING.com | www.HARTING.com

Pushing Performance
Since 1945

Material properties

Material flammability class acc. to UL 94	V-0
RoHS	compliant
ELV status	compliant
China RoHS	e
REACH Annex XVII substances	Not contained
REACH ANNEX XIV substances	Not contained
REACH SVHC substances	Not contained
California Proposition 65 substances	Not contained
Fire protection on railway vehicles	EN 45545-2 (2020-08)
Requirement set with Hazard Levels	R22 (HL 1-3) R23 (HL 1-3)

Specifications and approvals

UL / CSA	UL 1977 ECBT2.E102079 CSA-C22.2 No. 182.3 ECBT8.E102079
Railway classification	F1/I2 acc. to NFF 16-101/102

Commercial data

Packaging size	20
Country of origin	Romania
European customs tariff number	85366990
GTIN	5713140197862
ETIM	EC002637
eCl@ss	27460201 PCB connector (board connector)

HARTING Electronics GmbH | Marienwerderstraße 3 | 32339 Espelkamp | Germany
Phone +49 5772 47-97200 | electronics@HARTING.com | www.HARTING.com

Pushing Performance
Since 1945

Mating conditions

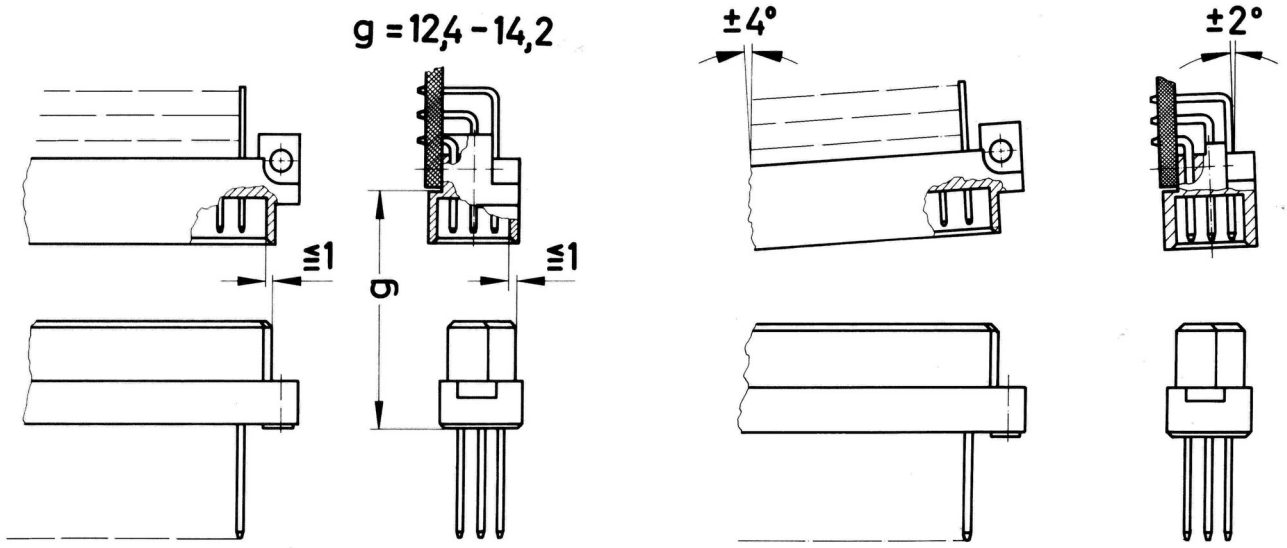

To ensure reliable connections and prevent unnecessary damage, please refer to the application data diagrams. These recommendations are set out in IEC 60603-2.
The connectors should not be coupled and decoupled under electrical load.

HARTING Electronics GmbH | Marienwerderstraße 3 | 32339 Espelkamp | Germany
Phone +49 5772 47-97200 | electronics@HARTING.com | www.HARTING.com