

Inductive sensor

NBN4-F25-2Z4L

- Direct mounting on standard actuators
- Small construction with sturdy plastic housing of protection class IP 67
- 2-wire DC sensor with minimum off-state current

Dimensions

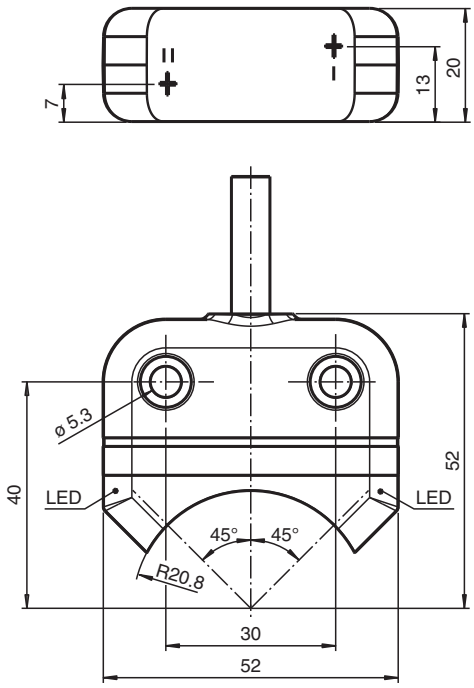

Technical Data

General specifications		
Switching function		Normally open (NO)
Output type		Two-wire with minimum off-state current
Rated operating distance	s_n	4 mm
Installation		flush mountable
Output polarity		DC
Assured operating distance	s_a	0 ... 3.24 mm
Actual operating distance	s_r	3.6 ... 4.4 mm typ.
Reduction factor r_{Al}		0.6
Reduction factor r_{Cu}		0.45
Reduction factor r_{304}		1

Release date: 2025-07-02 Date of issue: 2025-07-02 Filename: 264863_eng.pdf

Technical Data

Reduction factor r_{St37}		1.2
Output type		2x 2-wire
Nominal ratings		
Operating voltage	U_B	5 ... 30 V DC
Switching frequency	f	0 ... 500 Hz
Hysteresis	H	typ. 5 %
Reverse polarity protection		reverse polarity protected
Short-circuit protection		pulsing
Voltage drop	U_d	≤ 4.5 V
Operating current	I_L	4 ... 100 mA
Off-state current	I_r	120 ... 200 µA typ. 175 µA at 25 °C
Time delay before availability	t_v	≤ 100 ms
Switching state indicator		LED, yellow
Compliance with standards and directives		
Standard conformity		
Standards		EN IEC 60947-5-2
Approvals and certificates		
UL approval		cULus Listed Circuitry: Class 2 Power Source Enclosure Type Rating: Type 1 Supply/Switching Voltage: 30 V DC Output Switching Current: 200 mA
CCC approval		CCC approval / marking not required for products rated ≤36 V
Ambient conditions		
Ambient temperature		-25 ... 70 °C (-13 ... 158 °F)
Storage temperature		-40 ... 85 °C (-40 ... 185 °F)
Mechanical specifications		
Connection type		cable PVC , 2000 mm
Core cross section		0.75 mm²
Housing material		PBT
Sensing face		PC
Degree of protection		IP67
Cable		
Cable diameter		4.3 mm ± 0.1 mm
Bending radius		> 15 x cable diameter
Mass		405 g
Tightening torque, fastening screws		M5 x 25 : ≤ 2.7 Nm
Dimensions		
Height		20 mm
Width		52 mm
Length		52 mm
Note		Mounted on mechanical drive

Connection Assignment

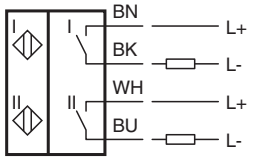

Release date: 2025-07-02 Date of issue: 2025-07-02 Filename: 264863_eng.pdf