Data sheet



BTF08-A1NM0241

HighLine

WIRE DRAW ENCODERS

SICK
Sensor Intelligence.



Ordering information

Type	part no.
BTF08-A1NM0241	1068884

Included in delivery: AHM36A-S3PC013x12 (1), MRA-F080-102D2 (1), BEF-FA-020-050WDE (1)

Other models and accessories ➜ www.sick.com/HighLine

Detailed technical data

Safety-related parameters

$MTTF_D$ (mean time to dangerous failure)	230 years (EN ISO 13849-1) [1]

[1] This product is a standard product and does not constitute a safety component as defined in the Machinery Directive. Calculation based on nominal load of components, average ambient temperature 40 °C, frequency of use 8760 h/a. All electronic failures are considered hazardous. For more information, see document no. 8015532.

Performance

Measurement range	0 m ... 2 m
Encoder	Absolute encoders
Resolution (wire draw + encoder)	0.02 mm [1] [2]
Repeatability	≤ 1 mm [3]
Linearity	≤ ± 2 mm [3]
Hysteresis	≤ 2 mm [3]

[1] The values shown have been rounded.

[2] Example calculation based on the BTF08 with PROFINET: 200 mm (wire draw length per revolution - see Mechanical data): 262,144 (number of steps per revolution) = 0.001 mm (resolution of wire draw + encoder combination).

[3] Value applies to wire draw mechanism.

Interfaces

Communication interface	SSI
Programmable/configurable	✓

Electronics

Connection type	Male connector, M12, 8-pin, universal
Supply voltage	4.5 V DC ... 32 V DC
Power consumption	≤ 1.5 W (without load)

Mechanics

Weight	1.42 kg
Measuring wire material	Highly flexible stranded steel 1,4401 stainless steel V4A
Measuring wire diameter	1.35 mm
Weight (measuring wire)	7.1 g/m
Housing material, wire draw mechanism	Aluminum (anodized), aluminum die cast (nickel-plated)
Spring return force	6 N ... 14 N [1]
Length of wire pulled out per revolution	200 mm
Life of wire draw mechanism	Typ. 1,000,000 cycles [2] [3]
Actual wire draw length	2.2 m
Wire acceleration	40 m/s²
Operating speed	8 m/s
Mounted encoder	AHM36 SSI, AHM36A-S3PC013X12, 1068330
Mounted mechanic	MRA-F080-102D2, 6028625

[1] These values were measred at an ambient temperature of 25 °C. There may be variations at other temperatures.

[2] Average values, which depend on the application.

[3] The service life depends on the type of load. This is influenced by environmental conditions, the installation location, the measuring range in use, the traversing speed, and acceleration.

Ambient data

EMC	According to EN 61000-6-2 and EN 61000-6-3
Enclosure rating	IP64, mounted mechanic IP66, Encoder (IEC 60529) IP67, Encoder (IEC 60529)
Operating temperature range	–30 °C ... +70 °C

Certificates

EU declaration of conformity	✓
UK declaration of conformity	✓
ACMA declaration of conformity	✓
Moroccan declaration of conformity	✓
China-RoHS	✓

Classifications

ECLASS 5.0	27270590
ECLASS 5.1.4	27270590
ECLASS 6.0	27270590
ECLASS 6.2	27270590
ECLASS 7.0	27270590
ECLASS 8.0	27270590
ECLASS 8.1	27270590
ECLASS 9.0	27270590
ECLASS 10.0	27270613
ECLASS 11.0	27270503
ECLASS 12.0	27270503

ETIM 5.0	EC001486
ETIM 6.0	EC001486
ETIM 7.0	EC001486
ETIM 8.0	EC001486
UNSPSC 16.0901	41112113

Dimensional drawing

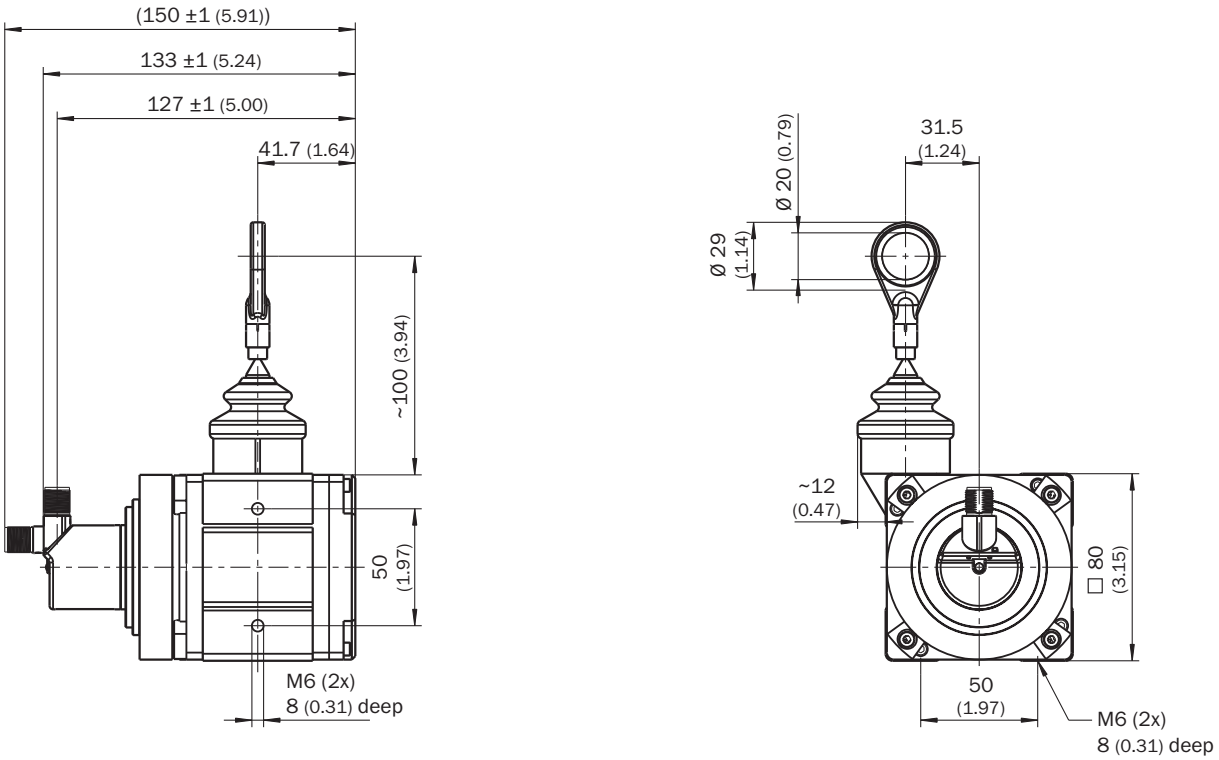

Dimensions in mm (inch)

PIN assignment M12 male connector, 8-pin and cable, 8-wire, SSI/Gray

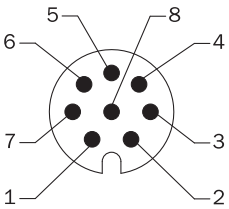

view of M12 male device connector on encoder

PIN	Wire colors (cable connection)	Signal	Explanation
1	Brown	Data -	Interface signals
2	White	Data +	Interface signals
3	Black	V/R	Sequence in direction of rotation

PIN	Wire colors (cable connection)	Signal	Explanation
4	Pink	SET	Electronic adjustmen-tInterface signals
5	Yellow	Clock +	Interface signals
6	Purple	Clock -	Interface signals
7	Blue	GND	Ground connection
8	Red	U_S	Operating voltage
–	–	Screen	Screen connected to hous-ing on encoder side. Connect-ed to ground on control side.

Recommended accessories

Other models and accessories ➜ www.sick.com/HighLine

	Brief description	Type	part no.
Mounting systems			
	• **Description:** Joint ball for later insertion in wire end ring with 20 mm diameter. The use of this joint ball enables movement in multiple levels of freedom.	Joint protection for wire rope BTF/PRF/MRA	5318683
	• **Description:** Compressed air attachment for MRA-F080... and MRA-F130... HighLine wire draw mechanism	MRA-F-P	6073769
	• **Description:** Flange adapter for HighLine wire draw mechanisms, adaption of face mount flange with centering hub 20 mm to 50 mm servo flange • **Material:** Aluminum • **Details:** Aluminum • **Items supplied:** Including 3 countersunk screws M3 x 10	BEF-FA-020-050WDE	2073776
programming devices			
	• **Product segment:** Programming devices • **Product family:** PGT-10 Pro • **Description:** Programming unit display for programmable SICK DFS60, DFV60, AFS/AFM60, AHS/AHM36 encoders, and wire draw encoder with DFS60, AFS/AFM60 and AHS/AHM36. Compact dimensions, low weight, and intuitive operation. • **Items supplied:** 1 x PGT-10-Pro stand-alone programming tool,4 x alkaline type batteries, 1.5 V Mignon (AA)	PGT-10-Pro	1072254
	• **Product segment:** Programming devices • **Product family:** PGT-08-S • **Description:** USB programming unit, for programmable SICK encoders AFS60, AFM60, DFS60, VFS60, DFV60 and wire draw encoders with programmable encoders	PGT-08-S	1036616

	Brief description	Type	part no.
connectors and cables			
	• **Connection type head A:** Female connector, M12, 8-pin, straight • **Connection type head B:** Male connector, D-Sub, 9-pin, straight • **Signal type:** SSI • **Cable:** 0.5 m, 8-wire, PUR, halogen-free • **Description:** SSI, shielded • **Note:** Suitable for use with SSI interfaces, not suitable for use with SSI + Incremental interface or SSI + Sin/Cos., programming adapter cable for programming tool PGT-10-Pro and PGT-08-S	DSL-2D08-G0M5AC2	2048439
	• **Connection type head A:** Female connector, M12, 8-pin, straight, A-coded • **Signal type:** Incremental, SSI • **Cable:** CAT5, CAT5e • **Description:** Incremental, shieldedSSI • **Connection systems:** IDC quick connection • **Permitted cross-section:** 0.14 mm² ... 0.34 mm²	DOS-1208-GA01	6045001
	• **Connection type head A:** Flying leads • **Connection type head B:** Flying leads • **Signal type:** SSI, Incremental, HIPERFACE® • **Items supplied:** By the meter • **Cable:** 8-wire, PUR, halogen-free • **Description:** SSI, shieldedIncrementalHIPERFACE®	LTG-2308-MWENC	6027529
	• **Connection type head A:** Flying leads • **Connection type head B:** Flying leads • **Signal type:** SSI, TTL, HTL, Incremental • **Items supplied:** By the meter • **Cable:** 12-wire, UV and saltwater-resistant, PUR, halogen-free • **Description:** SSI, shieldedTTLHTLIncremental	LTG-2612-MW	6028516
	• **Connection type head A:** Female connector, M12, 8-pin, straight • **Connection type head B:** Flying leads • **Signal type:** Incremental, SSI • **Cable:** 2 m, 8-wire, PUR, halogen-free • **Description:** Incremental, shieldedSSI • **Connection systems:** Flying leads	DOL-1208-G02MAC1	6032866
	• **Connection type head A:** Female connector, M12, 8-pin, straight • **Connection type head B:** Flying leads • **Signal type:** Incremental, SSI • **Cable:** 5 m, 8-wire, PUR, halogen-free • **Description:** Incremental, shieldedSSI • **Connection systems:** Flying leads	DOL-1208-G05MAC1	6032867
	• **Connection type head A:** Female connector, M12, 8-pin, straight • **Connection type head B:** Flying leads • **Signal type:** Incremental, SSI • **Cable:** 10 m, 8-wire, PUR, halogen-free • **Description:** Incremental, shieldedSSI • **Connection systems:** Flying leads	DOL-1208-G10MAC1	6032868
	• **Connection type head A:** Female connector, M12, 8-pin, straight • **Connection type head B:** Flying leads • **Signal type:** Incremental, SSI • **Cable:** 20 m, 8-wire, PUR, halogen-free • **Description:** Incremental, shieldedSSI • **Connection systems:** Flying leads	DOL-1208-G20MAC1	6032869
	• **Connection type head A:** Female connector, M12, 8-pin, straight • **Connection type head B:** Flying leads • **Signal type:** Incremental, SSI • **Cable:** 25 m, 8-wire, PUR, halogen-free • **Description:** Incremental, shieldedSSI • **Connection systems:** Flying leads	DOL-1208-G25MAC1	6067859
Wire draw mechanism			
	• **Product segment:** Wire draw mechanism • **Product family:** Wire draw mechanism for wire draw encoders • **Description:** HighLine wire draw mechanism for servo flange with 6 mm shaft, measuring range 0 m ... 2 m • **Items supplied:** Without encoder	MRA-F080-102D2	6028625

SICK AT A GLANCE

SICK is one of the leading manufacturers of intelligent sensors and sensor solutions for industrial applications. A unique range of products and services creates the perfect basis for controlling processes securely and efficiently, protecting individuals from accidents and preventing damage to the environment.

We have extensive experience in a wide range of industries and understand their processes and requirements. With intelligent sensors, we can deliver exactly what our customers need. In application centers in Europe, Asia and North America, system solutions are tested and optimized in accordance with customer specifications. All this makes us a reliable supplier and development partner.

Comprehensive services complete our offering: SICK LifeTime Services provide support throughout the machine life cycle and ensure safety and productivity.

For us, that is “Sensor Intelligence.”

WORLDWIDE PRESENCE:

Contacts and other locations –www.sick.com