

Inductive sensor

NBN25-30GM50-E1-V1-M

- 25 mm non-flush
- Extended temperature range -40 ... +85 °C
- E1-Type approval
- Increased noise immunity 100 V/m
- With increased sealing, protection class IP68 / IP69K
- Highly shock and vibration resistant

Dimensions

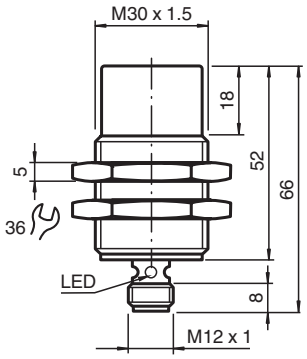

Technical Data

General specifications		
Switching function		Normally closed (NC)
Output type		NPN
Rated operating distance	s_n	25 mm
Installation		non-flush
Output polarity		DC
Assured operating distance	s_a	0 ... 20.25 mm
Reduction factor r_{Al}		0.5
Reduction factor r_{Cu}		0.45
Reduction factor r_{304}		0.7
Reduction factor r_{Brass}		0.5
Output type		3-wire
Nominal ratings		
Installation conditions		
A		28 mm
B		40 mm
C		75 mm
F		120 mm
Operating voltage	U_B	5 ... 60 V
Switching frequency	f	0 ... 200 Hz

Release date: 2025-07-31 Date of issue: 2025-07-31 Filename: 240193_eng.pdf

Technical Data

Hysteresis	H	typ. 5%
Reverse polarity protection		reverse polarity protected
Short-circuit protection		pulsing
Inductive overvoltage protection		yes
Surge suppression		yes
Voltage drop	U_d	≤ 2 V
Rated insulation voltage	U_{BIS}	60 V
Operating current	I_L	0 ... 200 mA
Off-state current	I_r	0 ... 0.5 mA typ. 6 µA at 25 °C
No-load supply current	I_0	≤ 7 mA
Time delay before availability	t_v	≤ 220 ms
Switching state indicator		Multihole-LED, yellow
Functional safety related parameters		
$MTTF_d$		830.5 a
Mission Time (T_M)		20 a
Diagnostic Coverage (DC)		0 %
Compliance with standards and directives		
Standard conformity		
Standards		EN IEC 60947-5-2
Approvals and certificates		
UL approval		cULus Listed Load Type: General Purpose Circuitry: Class 2 Power Source Supply/Switching Voltage: 60 V DC Output Switching Current: 200 mA
CSA approval		cCSAus Listed, General Purpose, Class 2 Power Source
CCC approval		Certified by China Compulsory Certification (CCC)
E1 Type approval		10R-04
Ambient conditions		
Ambient temperature		-40 ... 85 °C (-40 ... 185 °F)
Storage temperature		-40 ... 85 °C (-40 ... 185 °F)
Mechanical specifications		
Connection type		Connector plug
Housing material		brass, nickel-plated
Sensing face		PBT
Degree of protection		IP68 / IP69K
Connector		
Threading		M12 x 1
Number of pins		3
Mass		94 g
Dimensions		
Length		66 mm
Diameter		30 mm

Connection Assignment

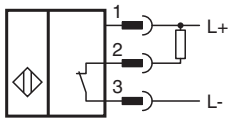

Release date: 2025-07-31 Date of issue: 2025-07-31 Filename: 240193_eng.pdf

Connection Assignment

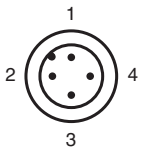

Wire colors in accordance with EN 60947-5-2

1	BN	(brown)
2	WH	(white)
3	BU	(blue)
4	BK	(black)

Installation Conditions

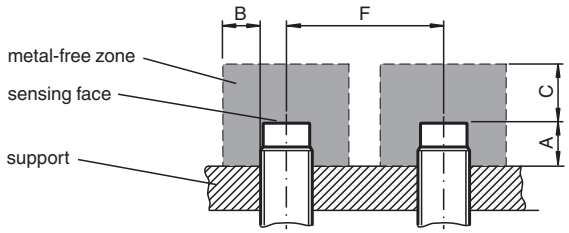

Technical Features

Interference immunity in accordance with
DIN ISO 11452-2: 100 V/m
Frequency band 20 MHz up to 2 GHz

Mains-borne interference in accordance with ISO

7637-2: Pulse	1	2a	2b	3 a	3b	4	5
Severity level	III	III	III	III	III	III	III
Failure criterion	C	A	C	A	A	A	B

EN 61000-4-2:	CD: 8 kV /	AD: 15 kV
Severity level	IV	IV
EN 61000-4-3:	30 V/m (80...2500 MHz)	
Severity level	IV	
EN 61000-4-4:	2 kV	
Severity level	III	
EN 61000-4-6:	10 V (0.01...80 MHz)	
Severity level	III	
EN 55011:	Class A	

Release date: 2025-07-31 Date of issue: 2025-07-31 Filename: 240193_eng.pdf