Data sheet



AHM36B-BCQC012x12

AHS/AHM36

ABSOLUTE ENCODERS

SICK
Sensor Intelligence.



Illustration may differ

Ordering information

Type	part no.
AHM36B-BCQC012x12	1092006

Other models and accessories ➜ www.sick.com/AHS_AHM36

Detailed technical data

Safety-related parameters

$MTTF_D$ (mean time to dangerous failure)	240 years (EN ISO 13849-1) [1]

[1] This product is a standard product and does not constitute a safety component as defined in the Machinery Directive. Calculation based on nominal load of components, average ambient temperature 40 °C, frequency of use 8760 h/a. All electronic failures are considered hazardous. For more information, see document no. 8015532.

Performance

Number of steps per revolution (max. resolution)	4,096 (12 bit)
Number of revolutions	4,096 (12 bit)
Max. resolution (number of steps per revolution x number of revolutions)	12 bit x 12 bit (4,096 x 4,096)
Error limits G	0.35° (at 20 °C) [1]
Repeatability standard deviation σ_r	0.25° (at 20 °C) [2]

[1] In accordance with DIN ISO 1319-1, position of the upper and lower error limit depends on the installation situation, specified value refers to a symmetrical position, i.e. deviation in upper and lower direction is the same.
[2] In accordance with DIN ISO 55350-13; 68.3% of the measured values are inside the specified area.

Interfaces

Communication interface	IO-Link
Communication Interface detail	IO-Link V1.1 / COM3 (230,4 kBaud)
Initialization time	2 s [1]
Cycle time	≤ 3.2 ms
Smart Sensor	Efficient communication, Enhanced Sensing
Process data	Position, speed
Parameterising data	Number of steps per revolution Number of revolutions PRESET

[1] Valid positional data can be read once this time has elapsed.

	Counting direction Sampling rate for speed calculation Unit for output of the speed value
Status information	Via status LED

[1] Valid positional data can be read once this time has elapsed.

Electronics

Connection type	Male connector, M12, 4-pin, universal
Supply voltage	18 ... 30 V
Power consumption	≤ 1.5 W
Reverse polarity protection	✓

Mechanics

Mechanical design	Blind hollow shaft
Shaft diameter	3/8″
Characteristics of the shaft	Front clamp
Weight	0.12 kg [1]
Shaft material	Stainless steel
Flange material	Aluminum
Housing material	Zinc
Start up torque	< 0.5 Ncm (+20 °C)
Operating torque	< 0.5 Ncm (+20 °C)
Permissible movement static	± 0.3 mm, ± 0.3 mm (radial, axial)
Permissible movement dynamic	± 0.1 mm (radial) ± 0.1 mm (axial)
Operating speed	≤ 6,000 min^{-1}
Moment of inertia of the rotor	15 gcm^2
Bearing lifetime	2.0 x 10^9 revolutions
Angular acceleration	≤ 500,000 rad/s^2

[1] Based on devices with male connector.

Ambient data

EMC	According to EN 61000-6-2, EN 61000-6-3 and EN 61131-9
Enclosure rating	IP65 (IEC 60529)
Permissible relative humidity	90 % (Condensation not permitted)
Operating temperature range	–20 °C ... +70 °C
Storage temperature range	–40 °C ... +100 °C, without package
Resistance to shocks	100 g, 6 ms (EN 60068-2-27)
Resistance to vibration	20 g, 10 Hz ... 2,000 Hz (EN 60068-2-6)

Classifications

ECLASS 5.0	27270502
ECLASS 5.1.4	27270502
ECLASS 6.0	27270590
ECLASS 6.2	27270590

ECLASS 7.0	27270502
ECLASS 8.0	27270502
ECLASS 8.1	27270502
ECLASS 9.0	27270502
ECLASS 10.0	27270502
ECLASS 11.0	27270502
ECLASS 12.0	27270502
ETIM 5.0	EC001486
ETIM 6.0	EC001486
ETIM 7.0	EC001486
ETIM 8.0	EC001486
UNSPSC 16.0901	41112113

Certificates

EU declaration of conformity	✓
UK declaration of conformity	✓
ACMA declaration of conformity	✓
Moroccan declaration of conformity	✓
China-RoHS	✓
cTUVus certificate	✓
Information according to Art. 3 of Data Act (Regulation EU 2023/2854)	✓

Dimensional drawing Blind hollow shaft, male connector

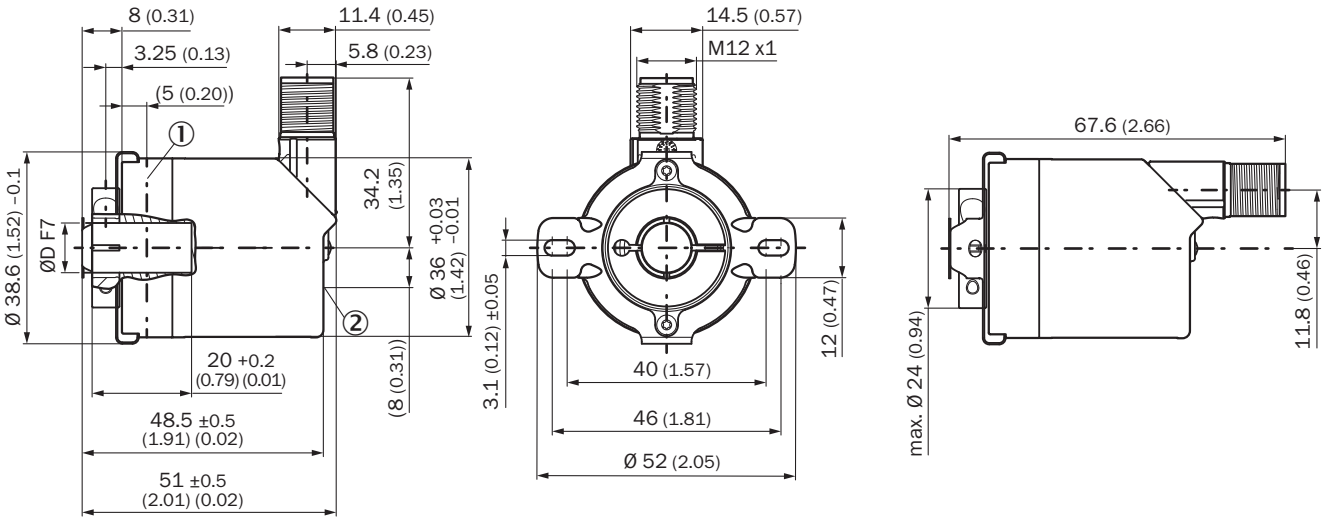

Dimensions in mm (inch)
① Measuring point for operating temperature
② measuring point for vibrations

Type	Shaft diameterØ D F7
AHx36x-BAxxxxxxxx	6 mm

Type	Shaft diameterØ D F7
AHx36x-BBxxxxxxxx	8 mm
AHx36x-BCxxxxxxxx	1/4″
AHx36x-BDxxxxxxxx	10 mm
AHx36x-BKxxxxxxxx	3/8″

Attachment specifications

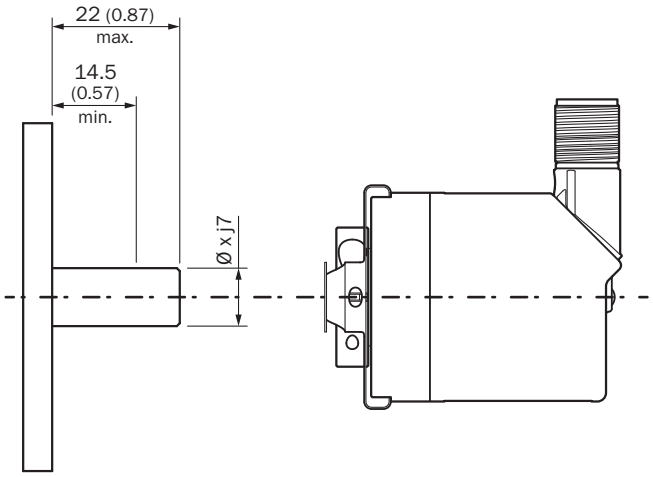

PIN assignment

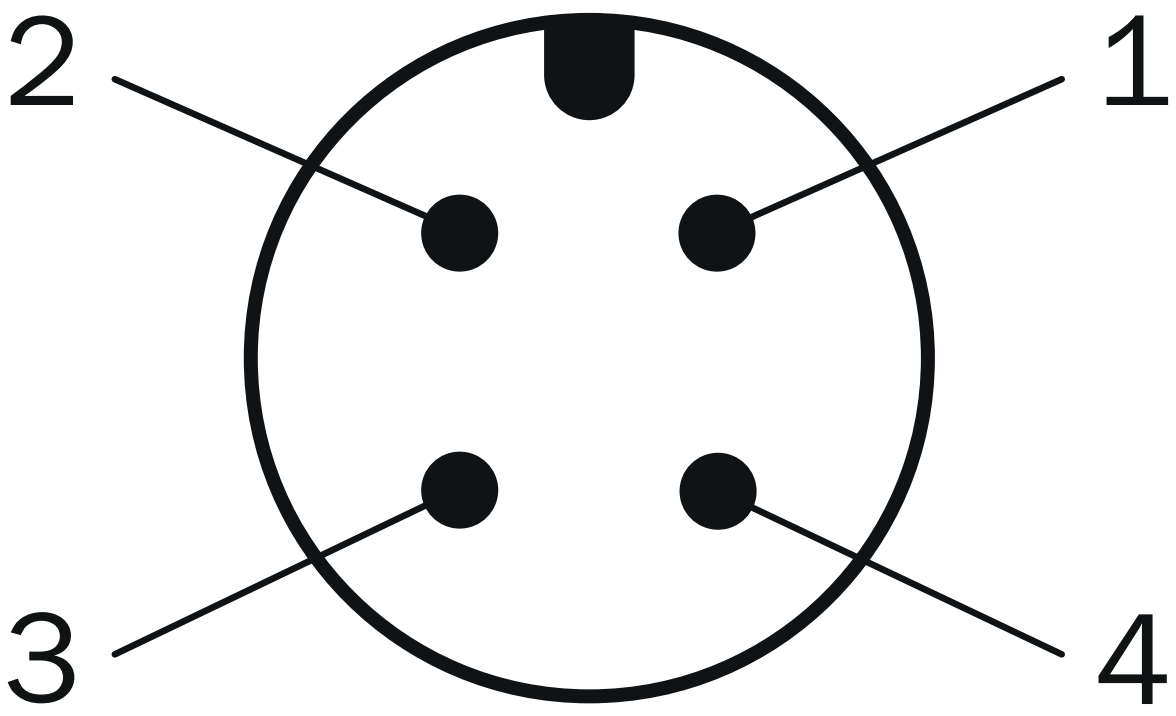

PIN	Wire color	Signal	Function		
–	–	–	Basic	Advanced	Advanced Smart Task
1	Brown	L+	Encoder supply voltage 18-30 V (+Us)		
2	White	I/Q	Not connected - no function	Multifunctional pin (configurable as switching input or switching output)	
3	Blue	L-	Encoder supply voltage 0 V (GND)		
4	Black	C/Q	IO-Link communication		
		–	-		Switching output (SIO mode)

Recommended accessories

Other models and accessories ➜ www.sick.com/AHS_AHM36

	Brief description	Type	part no.
connectors and cables			
	• **Connection type head A:** Female connector, M12, 4-pin, straight, A-coded • **Description:** Unshielded • **Connection systems:** Screw-type terminals • **Permitted cross-section:** ≤ 0.75 mm²	DOS-1204-G	6007302
	• **Connection type head A:** Female connector, M12, 4-pin, straight, A-coded • **Connection type head B:** Male connector, M12, 4-pin, straight, A-coded • **Signal type:** Sensor/actuator cable • **Cable:** 2 m, 4-wire, PUR, halogen-free • **Description:** Sensor/actuator cable, unshielded • **Application:** Uncontaminated zones, Zones with oils and lubricants, Robot, Drag chain operation	YF2A14-020UB3M2A14	2096000
	• **Connection type head A:** Female connector, M12, 4-pin, straight, A-coded • **Connection type head B:** Male connector, M12, 4-pin, straight, A-coded • **Signal type:** Sensor/actuator cable • **Cable:** 5 m, 4-wire, PUR, halogen-free • **Description:** Sensor/actuator cable, unshielded • **Application:** Uncontaminated zones, Zones with oils and lubricants, Robot, Drag chain operation	YF2A14-050UB3M2A14	2096001
	• **Connection type head A:** Female connector, M12, 4-pin, straight, A-coded • **Connection type head B:** Male connector, M12, 4-pin, straight, A-coded • **Signal type:** Sensor/actuator cable • **Cable:** 10 m, 4-wire, PUR, halogen-free • **Description:** Sensor/actuator cable, unshielded • **Application:** Uncontaminated zones, Zones with oils and lubricants, Robot, Drag chain operation	YF2A14-100UB3M2A14	2096002
	• **Connection type head A:** Female connector, M12, 4-pin, straight, A-coded • **Connection type head B:** Flying leads • **Signal type:** Sensor/actuator cable • **Cable:** 2 m, 4-wire, PUR, halogen-free • **Description:** Sensor/actuator cable, unshielded • **Application:** Uncontaminated zones, Zones with oils and lubricants, Robot, Drag chain operation	YF2A14-020UB3XLEAX	2095607
	• **Connection type head A:** Female connector, M12, 4-pin, straight, A-coded • **Connection type head B:** Flying leads • **Signal type:** Sensor/actuator cable • **Cable:** 5 m, 4-wire, PUR, halogen-free • **Description:** Sensor/actuator cable, unshielded • **Application:** Uncontaminated zones, Zones with oils and lubricants, Robot, Drag chain operation	YF2A14-050UB3XLEAX	2095608
	• **Connection type head A:** Female connector, M12, 4-pin, straight, A-coded • **Connection type head B:** Flying leads • **Signal type:** Sensor/actuator cable • **Cable:** 10 m, 4-wire, PUR, halogen-free • **Description:** Sensor/actuator cable, unshielded • **Application:** Uncontaminated zones, Zones with oils and lubricants, Robot, Drag chain operation	YF2A14-100UB3XLEAX	2095609
	• **Connection type head A:** Female connector, M12, 4-pin, straight, A-coded • **Connection type head B:** Flying leads • **Signal type:** Sensor/actuator cable • **Cable:** 0.6 m, 4-wire, PUR, halogen-free • **Description:** Sensor/actuator cable, unshielded • **Application:** Uncontaminated zones, Zones with oils and lubricants, Robot, Drag chain operation	YF2A14-C60UB3XLEAX	2145654
	• **Connection type head A:** Female connector, M12, 4-pin, straight, A-coded • **Connection type head B:** Flying leads • **Signal type:** Sensor/actuator cable • **Cable:** 1 m, 4-wire, PUR, halogen-free • **Description:** Sensor/actuator cable, unshielded • **Application:** Uncontaminated zones, Zones with oils and lubricants, Robot, Drag chain operation	YF2A14-010UB3XLEAX	2145655
	• **Connection type head A:** Female connector, M12, 4-pin, straight, A-coded • **Connection type head B:** Flying leads • **Signal type:** Sensor/actuator cable • **Cable:** 3 m, 4-wire, PUR, halogen-free • **Description:** Sensor/actuator cable, unshielded • **Application:** Uncontaminated zones, Zones with oils and lubricants, Robot, Drag chain operation	YF2A14-030UB3XLEAX	2145656

	Brief description	Type	part no.
Mounting systems			
	• **Product family:** Stator couplings • **Description:** Standard stator coupling, AHS/AHM36	BEF-DS16-AHX	2108615

SICK AT A GLANCE

SICK is one of the leading manufacturers of intelligent sensors and sensor solutions for industrial applications. A unique range of products and services creates the perfect basis for controlling processes securely and efficiently, protecting individuals from accidents and preventing damage to the environment.

We have extensive experience in a wide range of industries and understand their processes and requirements. With intelligent sensors, we can deliver exactly what our customers need. In application centers in Europe, Asia and North America, system solutions are tested and optimized in accordance with customer specifications. All this makes us a reliable supplier and development partner.

Comprehensive services complete our offering: SICK LifeTime Services provide support throughout the machine life cycle and ensure safety and productivity.

For us, that is “Sensor Intelligence.”

WORLDWIDE PRESENCE:

Contacts and other locations –www.sick.com