# M39003/09-0082

Aliases (T262C186K050MS, M39003/09-0082, CSR21G186KM)

T262 CSR21, Tantalum, MnO2 Tantalum, Military/High Reliability, 18 uF, 10%, 50 VDC, 175 mOhms

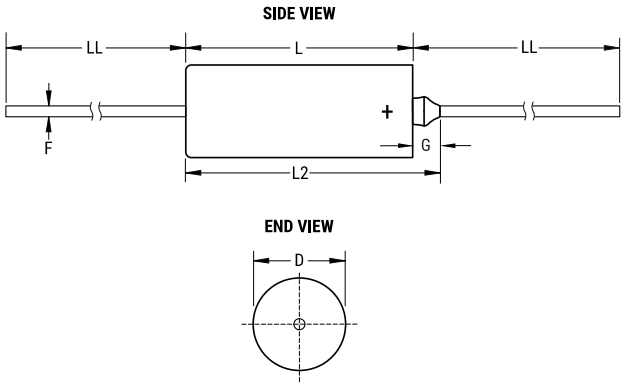


Click here for the 3D model.

| General Information | |
|---|---|
| Series | T262 CSR21 |
| Dielectric | MnO2 Tantalum |
| Style | Axial Hermetic |
| Description | Axial, Solid Tantalum, Hermetically Sealed, Military, CSR21 Style |
| Features | Low ESR, High Current |
| RoHS | No |
| Prop 65 | **WARNING:** Cancer and reproductive harm - https://www.p65warnings.ca.gov/ . |
| SCIP Number | bee1eed4-5fec-4214-9f43-620c5b22071f |
| Termination | Lead (SnPb) |
| Lead | Wire Leads |
| Qualifications | MIL-PRF-39003, CSR21 |
| AEC-Q200 | No |
| Construction | Hermetic |
| Miscellaneous | Ripple Current Rating Shown Is At 40Khz And 25C; ESR Is Per MIL-PRF-39003/9. |
| Notes | Dimensions Include Insulating Sleeve. Lead Length Shown Is For Parts Supplied With Bulk Packaging, When Supplied On T&R Or Ammo, Lead Length Is Determined By Taping Specification. |

| Dimensions | |
|---|---|
| D | 7.34mm +/-0.25mm |
| L | 17.42mm +/-0.79mm |
| L2 | 20.88mm |
| LL | 38.1mm +/-6.35mm |
| F | 0.64mm +/-0.05mm |
| G | 3.46mm +0.79mm |

| Packaging Specifications | |
|---|---|
| Packaging | Tray |
| Packaging Quantity | 20 |

| Specifications | |
|---|---|
| Capacitance | 18 uF |
| Tolerance | 10% |
| Voltage DC | 50 VDC (85C), 40 VDC (125C Surge), 0.5 VDC (125C Reverse) |
| Temperature Range | -55/+125°C |
| Dissipation Factor | 4% 1kHz 25C |
| Failure Rate | M (1%/1000 Hrs) |
| ESR | 0.175 Ohms (100kHz) |
| Ripple Current | 2000 mAmps (100kHz) |
| Leakage Current | 4.5 uA |
| Testing and Reliability | Standard Testing To MIL-PRF-39003 |

Statements of suitability for certain applications are based on our knowledge of typical operating conditions for such applications, but are not intended to constitute - and we specifically disclaim - any warranty concerning suitability for a specific customer application or use. This Information is intended for use only by customers who have the requisite experience and capability to determine the correct products for their application. Any technical advice inferred from this Information or otherwise provided by us with reference to the use of our products is given gratis, and we assume no obligation or liability for the advice given or results obtained.



© 2006 - 2025 YAGEO