VAL-US 60/1+1/1U/FM - Type 2 surge arrester

2909630

https://www.phoenixcontact.com/us/products/2909630

Please be informed that the data shown in this PDF document is generated from our online catalog. Please find the complete data in the user documentation. Our general terms of use for downloads are valid.



Universal varistor-based plug-in surge arrester for 48 - 60 V DC applications with two conductors plus ground, with remote indication contact

Your advantages

- Dual-channel, panel mountable surge protective device
- Orthogonal mounting orientation to plug
- Base element with floating remote indication contact
- Rack-mount 1U panel applications

Commercial data

Item number	2909630
Packing unit	1 pc
Minimum order quantity	1 pc
Sales key	CL18
Product key	CL1321
GTIN	4055626370538
Weight per piece (including packing)	222.22 g
Weight per piece (excluding packing)	222.22 g
Customs tariff number	85363010
Country of origin	US

Technical data

Product properties

Product type	Surge protection for NEMA power supply units
Product family	VALVETRAB MS
IEC test classification	II
	T2
EN type	T2
IEC power supply system	TN-S
Type	DIN rail module, two-section, divisible
Surge protection fault message	Optical, remote indicator contact

Insulation characteristics

Pollution degree	2

Electrical properties

Nominal frequency f_N	50 Hz (60 Hz)

Indicator/remote signaling

Connection name	Remote fault indicator contact
Switching function	Changeover contact
Operating voltage	5 V AC ... 250 V AC
	125 V AC (UL)
	125 V DC (200 mA DC)
Operating current	5 mA AC ... 1.5 A
	1 A (UL)
	1 A (30 V DC)

Connection data

Connection method	Screw connection
Screw thread	M5
Tightening torque	2.5 Nm ... 3 Nm
	22 lb_f-in. ... 26.5 lb_f-in. (UL)
Stripping length	16 mm
Conductor cross section flexible min.	1.5 mm²
Conductor cross section flexible max.	25 mm²
Conductor cross section, rigid min.	1.5 mm²
Conductor cross section, rigid max.	35 mm²
Conductor cross section AWG	15 ... 2
	10 ... 2 (UL)

Remote fault indicator contact

Connection method	Push-in spring connection
Stripping length	6 mm
Conductor cross section flexible min.	0.2 mm²

Conductor cross section flexible max.	0.5 mm²
Conductor cross section, rigid min.	0.14 mm²
Conductor cross section, rigid max.	0.5 mm²
Conductor cross section AWG	24 ... 20 (UL)

Dimensions

Dimensional drawing	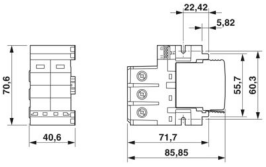
Width	70.6 mm
Height	40.6 mm
Height unit	1 U
Depth	85.6 mm

Material specifications

Color	gray (RAL 7042)
	gray (RAL 7042)
Flammability rating according to UL 94	V-0
Housing material	PA 6.6
	PBT

Protective circuit

Mode of protection	L-N
	N-PE
Direction of action	L-N & L(N)-PE
Nominal voltage U_N	60 V AC ±10 % (TN-S)
	-48 V DC ±10 % (RRH)
Nominal frequency f_N	50 Hz (60 Hz)
Maximum continuous voltage U_C	75 V AC
	100 V DC
Rated load current I_L	80 A
Residual current I_{PE}	≤ 0.45 mA
Standby power consumption P_C	≤ 35.00 mVA
Nominal discharge current I_n (8/20) µs	15 kA
Maximum discharge current I_{max} (8/20) µs	40 kA
Short-circuit current rating I_{SCCR}	25 kA
Voltage protection level U_p	≤ 0.55 kV
Residual voltage U_{res}	≤ 0.55 kV (at I_n)
	≤ 0.425 kV (at 10 kA)
	≤ 0.325 kV (at 5 kA)
	≤ 0.275 kV (at 3 kA)
TOV behavior at U_T	100 V AC (5 s / withstand mode)

Response time t_A	≤ 25 ns
Max. backup fuse with V-type through wiring	80 A AC (gG - 16 mm²)
Max. backup fuse with branch wiring	160 A AC (gG)

Additional technical data

Maximum discharge current I_{max} (8/20) µs	40 kA

Environmental and real-life conditions

Ambient conditions

Degree of protection	IP20 (only when all terminal points are used)
Ambient temperature (operation)	-40 °C ... 80 °C
Ambient temperature (storage/transport)	-40 °C ... 80 °C
Altitude	≤ 2000 m (amsl)
Permissible humidity (operation)	5 % ... 95 %
Shock (operation)	30g (Half-sine / 11 ms / 3x ±X, ±Y, ±Z)
Vibration (operation)	7.5g (10 ... 500 Hz / 2.5 h / X, Y, Z)

Approvals

UL specifications

Maximum continuous operating voltage MCOV (L-N)	75 V AC
	100 V DC
Mode of protection	N-G
	L-N
	(L+) - (L-)
	(L+) - G
	(L-) - G
Nominal voltage	60 V DC
Power distribution system	DC
SPD Type	4CA

UL indicator/remote signaling

Operating voltage	125 V AC
AC operating current	1 A AC

UL connection data

Tightening torque	30 lb_f-in.
Conductor cross section AWG	10 ... 2

Mounting

Mounting type	Panel mount

Drawings

Drilling plan/solder pad geometry

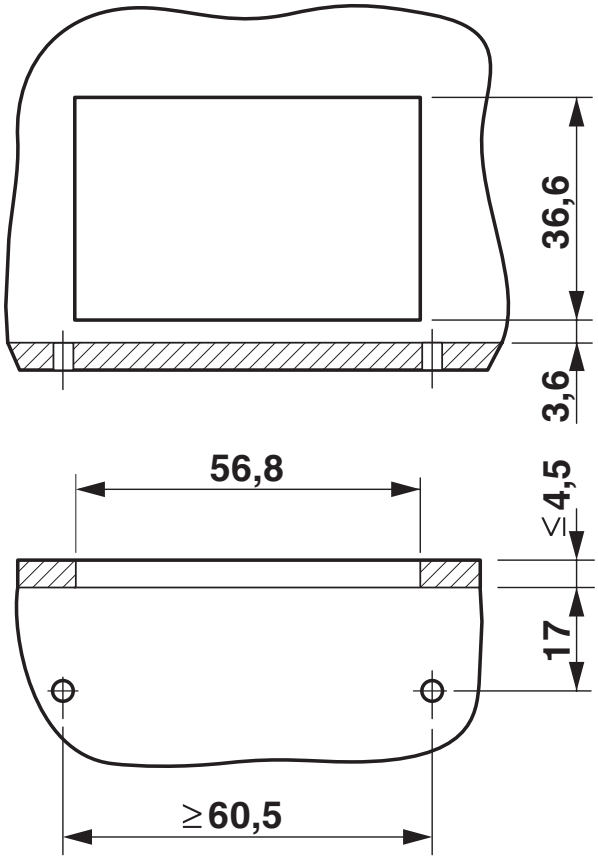

Circuit diagram

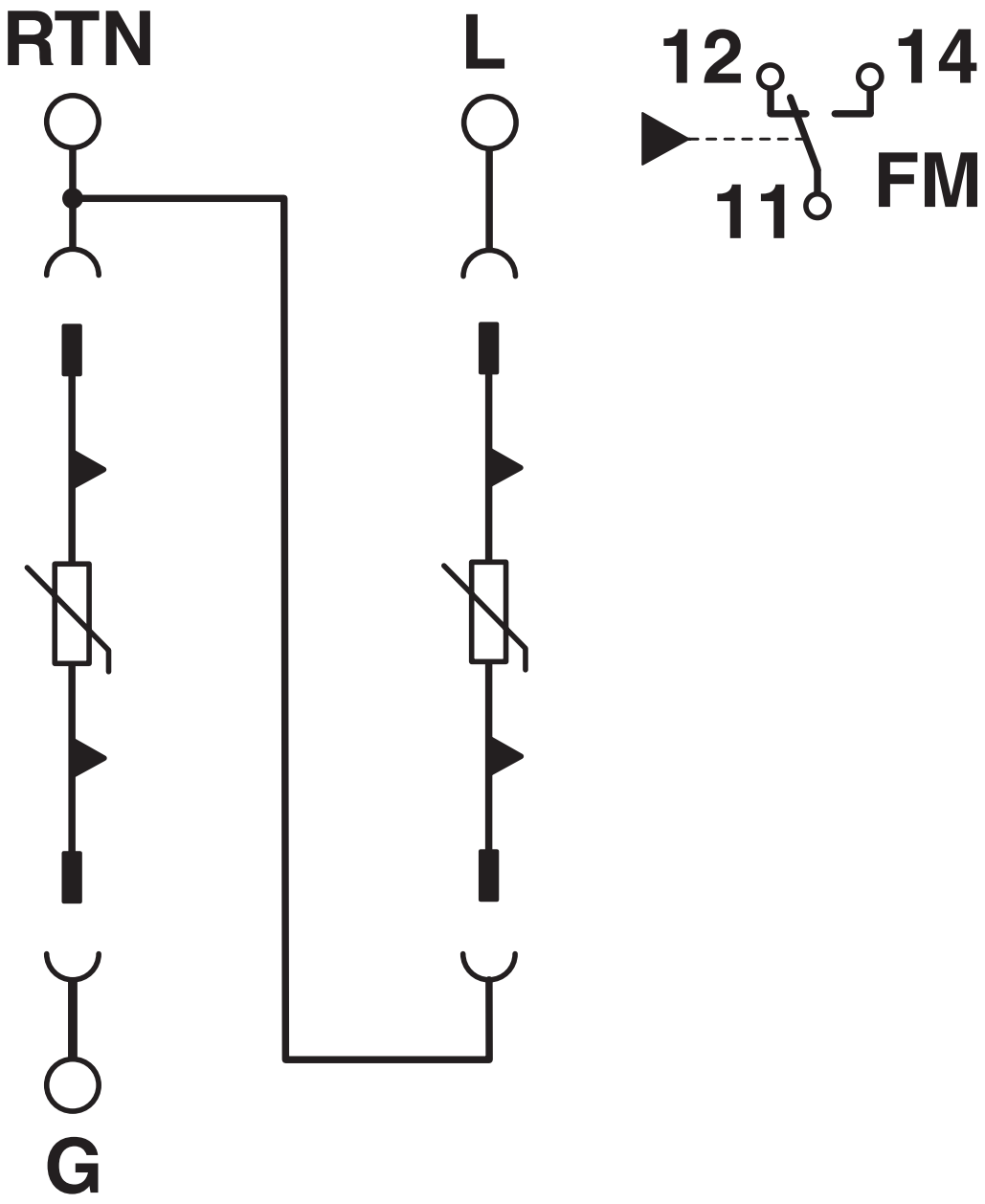

Dimensional drawing

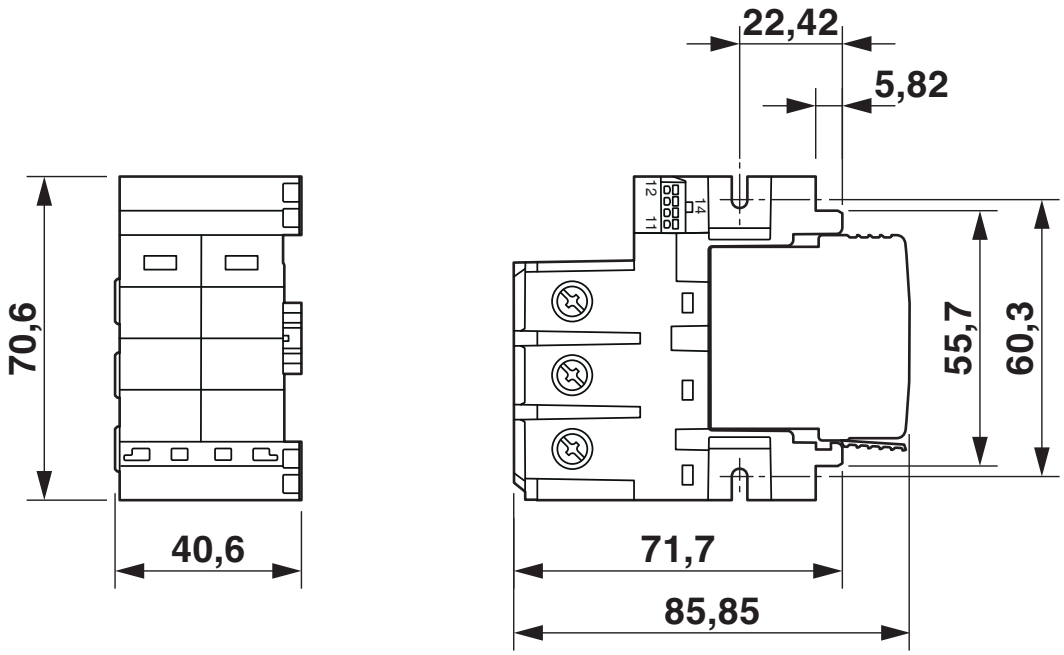

Classifications

ECLASS

ECLASS-11.0	27130805
ECLASS-13.0	27171202

ETIM

ETIM 8.0	EC000941

UNSPSC

UNSPSC 21.0	39121600

Environmental product compliance

China RoHS

Environment friendly use period (EFUP)	EFUP-50
	An article-related China RoHS declaration table can be found in the download area for the respective article under "Manufacturer declaration". For all articles with EFUP-E, no China RoHS declaration table issued and required.

EU REACH SVHC

REACH candidate substance (CAS No.)	No substance above 0.1 wt%

Accessories

ZBN 18,LGS:ERDE - Marker for terminal blocks

2749589

https://www.phoenixcontact.com/us/products/2749589



Marker for terminal blocks, Strip, white, labeled, horizontal: Grounding symbol, mounting type: snapped, for terminal block width: 18 mm, lettering field size: 18 x 5 mm, Number of individual labels: 5

ZBN 18,LGS:L1-N,ERDE - Marker for terminal blocks

2749576

https://www.phoenixcontact.com/us/products/2749576



Marker for terminal blocks, Strip, white, labeled, horizontal: L1, L2, L3, N, GND, mounting type: snapped, for terminal block width: 18 mm, lettering field size: 18 x 5 mm, Number of individual labels: 5

ZBN 18:UNBEDRUCKT - Zack marker strip

2809128

https://www.phoenixcontact.com/us/products/2809128



Zack marker strip, Strip, white, unlabeled, can be labeled with: CMS-P1-PLOTTER, PLOTMARK, mounting type: snapped, for terminal block width: 18 mm, lettering field size: 18 x 5 mm, Number of individual labels: 5

B-STIFT - Marker pen

1051993

https://www.phoenixcontact.com/us/products/1051993



Marker pen, for manual labeling of unprinted Zack strips, smear-proof and waterproof, line thickness 0.5 mm

SZK PZ2 VDE - Screwdriver

1206463

https://www.phoenixcontact.com/us/products/1206463



Screwdriver, PZ crosshead, VDE insulated, size: PZ 2 x 100 mm, 2-component grip, with non-slip grip

VAL-US-48/40-P - Type 2 surge protection plug

2910333

https://www.phoenixcontact.com/us/products/2910333



UL Recognized type 2 SPD and IEC type 2 surge protection plug with a varistor and thermal disconnect for use with VAL-US base elements, mechanical and visual fault warning

VAL-MS BE/1+1/1U/FM - Base element

2909628

https://www.phoenixcontact.com/us/products/2909628



Universal plug-in surge arrester base for up to 240 V applications with two conductors plus ground, with remote indication contact

Phoenix Contact 2024 © - all rights reserved
https://www.phoenixcontact.com

Phoenix Contact USA
586 Fulling Mill Road
Middletown, PA 17057, United States
(+717) 944-1300
info@phoenixcon.com