# Product data sheet

Specifications



## Circuit breaker, PowerPacT B, 20A, 3 pole, 600Y/347VAC, 25kA, terminal nut, thermal magnetic, 80%

BJF36020

**Product availability: Non-Stock - Not normally stocked in distribution facility**

## Main

| | |
|---|---|
| **Range** | PowerPact |
| **Product name** | PowerPact B |
| **Device short name** | BJ 020 |
| **Product or Component Type** | Circuit breaker |
| **Device Application** | Distribution |

## Complementary

| | |
|---|---|
| **Line Rated Current** | 20 A |
| **Number of Poles** | 3P |
| **Protected poles description** | 3t |
| **Control Type** | Toggle |
| **Breaking capacity code** | J |
| **Breaking capacity** | 100 kA 208Y/120 V AC 50/60 Hz UL 489<br>100 kA 240 V AC 50/60 Hz UL 489<br>65 kA 480/277 V AC 50/60 Hz UL 489<br>65 kA 480 V AC 50/60 Hz UL 489<br>25 kA 600Y/347 V AC 50/60 Hz UL 489<br>50 kA 250 V DC UL 489 |
| **[Ue] rated operational voltage** | 690 V AC 50/60 Hz UL 489 |
| **Network Frequency** | 50/60 Hz |
| **[Ics] rated service breaking capacity** | 100 kA 220...240 V AC 50/60 Hz IEC 60947-2<br>25 kA 500...525 V AC 50/60 Hz IEC 60947-2<br>10 kA 690 V AC 50/60 Hz IEC 60947-2<br>65 kA 380...415 V AC 50/60 Hz IEC 60947-2<br>65 kA 440 V AC 50/60 Hz IEC 60947-2 |
| **[Uimp] rated impulse withstand voltage** | 8 kV IEC 60947-2 |
| **Trip unit technology** | Thermal-magneticTM-D, |
| **Continuous current rating** | 80 % |
| **[Ui] rated insulation voltage** | 800 V IEC 60947-2 |
| **Trip unit name** | TM-D |
| **Suitability for isolation** | Yes IEC 60947-2 |
| **Utilisation category** | Category A |
| **Mechanical durability** | 15000 cycles IEC 947-1 Annex K ed 5.2 |
| **Electrical durability** | 10000 cycles IEC 947-1 Annex K ed 5.2 440 V In |
| **Connection pitch** | 1.06 in (27 mm) |

Price is “List Price” and may be subject to a trade discount – check with your local distributor or retailer for actual price.

Disclaimer: This documentation is not intended as a substitute for and is not to be used for determining suitability or reliability of these products for specific user applications

| | |
|---|---|
| **AWG gauge** | AWG 14...AWG 8 aluminium/copper<br>AWG 6...AWG 3/0 aluminium/copper |
| **Local signalling** | Presence of auxiliary contacts flag green) |
| **Mounting mode** | Clip-on 35 mm symmetrical DIN rail)<br>By screws plate) |
| **Electrical connection** | Terminal nut, ON and OFF end |
| **Tightening torque** | 44.3 lbf.in (5 N.m) 0.004…0.02 in² (2.5…16 mm²) (AWG 14...AWG 4)<br>79.7 lbf.in (9 N.m) 0.04…0.1 in² (25…95 mm²) (AWG 3...AWG 3/0) |
| **Number of slots** | 1 auxiliary switch OF plug-in)<br>1 voltage release MN or MX plug-in)<br>1 alarm switch SD plug-in) |
| **Power wire stripping length** | 0.8 in (20 mm) |
| **Color** | Gray RAL 7016) |
| **9 mm pitches** | 9 |
| **Height** | 5.4 in (137 mm) |
| **Width** | 3.2 in (81 mm) |
| **Depth** | 3.1 in (80 mm) |
| **Net Weight** | 2.037 lb(US) (0.924 kg) |
| **Quantity per Set** | Set of 1 |
| **Circuit breaker application** | HACR rated |

## Environment

| | |
|---|---|
| **Quality labels** | CE |
| **Standards** | NMX J-266<br>CSA C22.2 No 5<br>EN/IEC 60947-2<br>NEMA AB1<br>EN/IEC 60947-5-1<br>UL 489<br>GB 14048.2 |
| **Product certifications** | UL<br>IEC<br>CCC<br>EAC<br>CSA<br>NOM |
| **IP degree of protection** | Front cover IP40 IEC 60529 |
| **IK degree of protection** | IK07 conforming to IEC 62262 |
| **Pollution degree** | 3 IEC 60947-1 |
| **Ambient Air Temperature for Operation** | -13…158 °F (-25…70 °C) |
| **Ambient Air Temperature for Storage** | -58…185 °F (-50…85 °C) |
| **Operating altitude** | 6561.68 ft (2000 m) without derating<br>5000 m with derating |

## Ordering and shipping details

| | |
|---|---|
| **Category** | US10DE201132 |
| **Discount Schedule** | 0DE2 |
| **GTIN** | 3606481149817 |
| **Returnability** | Yes |

| | |
|---|---|
| **Country of origin** | US |

## Packing Units

| | |
|---|---|
| **Unit Type of Package 1** | PCE |
| **Nbr. of units in pkg.** | 1 |
| **Package 1 Height** | 3.300 in (8.382 cm) |
| **Package 1 Width** | 4.700 in (11.938 cm) |
| **Package 1 Length** | 8.100 in (20.574 cm) |
| **Package weight(Lbs)** | 2.599 lb(US) (1.179 kg) |

## Environmental Data

Schneider Electric aims to achieve Net Zero status by 2050 through supply chain partnerships, lower impact materials, and circularity via our ongoing “Use Better, Use Longer, Use Again” campaign to extend product lifetimes and recyclability.

Environmental Data explained >

How we assess product sustainability >

### Environmental footprint

| | |
|---|---|
| Carbon footprint (kg CO2 eq, Total Life cycle) | 183 |
| Environmental Disclosure | Product Environmental Profile |

## Use Better

### Materials and Substances

| | |
|---|---|
| Packaging made with recycled cardboard | Yes |
| Packaging without single use plastic | Yes |
| EU RoHS Directive | Compliant with Exemptions |
| REACh Regulation | REACh Declaration |
| California proposition 65 | WARNING: This product can expose you to chemicals including: DINP, which is known to the State of California to cause cancer, and DIDP, which is known to the State of California to cause birth defects or other reproductive harm. For more information go to www.P65Warnings.ca.gov |
| Halogen content performance | Halogen free product |
| PVC free | Yes |

## Use Again

### Repack and remanufacture

| | |
|---|---|
| Circularity Profile | No need of specific recycling operations |
| Take-back | No |
| WEEE Label | The product must be disposed on European Union markets following specific waste collection and never end up in rubbish bins. |

Technical Illustration

## Dimensions

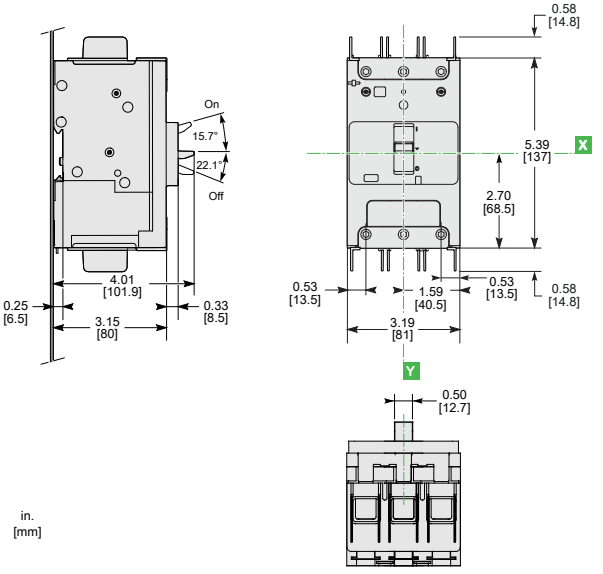


(F) TERMINATION OPTION - Terminal Nut (ON end) / Terminal Nut (OFF end)
ALL DIMENSIONS ARE APPROXIMATE.
ALSO REFER TO CAD, TECHNICAL DRAWINGS, AND DOCUMENTATION