EV6500A-U-00A

35V, 2.5A, Bipolar Stepper Motor Driver with Current Setting via VSET in QFN-24 Package Evaluation Board

DESCRIPTION

The EV6500A-U-00A is an evaluation board designed to demonstrate the capabilities of the MP6500A, a stepper motor driver with a built-in, microstepping translator.

The MP6500A operates from a supply voltage of up to 35V and can deliver a motor current up to 2.5A. It can operate a bipolar stepper motor in full-, half-, quarter-, and eighth-step modes by setting the MS2 and MS1 pins. The input control signals for the MP6500A are applied through the connector or generated on the board.

The MP6500A is available in a QFN-24 (5mmx5mm) package. It is recommended to read the MP6500A datasheet prior to making any changes to the EV6500A-U-00A.

PERFORMANCE SUMMARY

Parameters	Conditions	Value
Input voltage (V_{IN}) range		4.5V to 35V
Maximum output current (I_{OUT_MAX})		2.5A
VCC voltage (V_{CC})		3.3V or 5V

EV6500A-U-00A EVALUATION BOARD

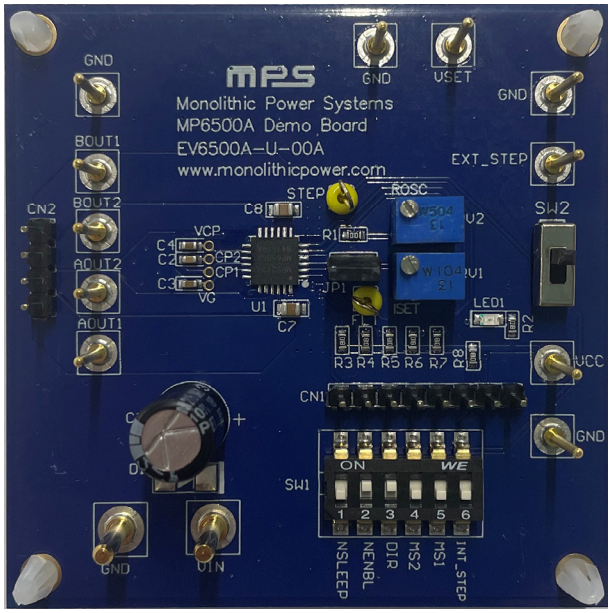

LxW (6.35cmx6.35cm)

Board Number	MPS IC Number
EV6500A-U-00A	MP6500AGU

MPS Proprietary Information. Patent Protected. Unauthorized Photocopy and Duplication Prohibited.
© 2022 MPS. All Rights Reserved.

QUICK START GUIDE

1. Connect the input voltage (4.5V ≤ V_{IN} ≤ 35V) and input ground to the VIN and GND connectors, respectively.
2. To configure the output current limit (I_{OUT_LIM}) via the VSET pin, follow the steps below:
   a. Remove the JP1 jumper and connect an external 0V to 2V voltage to the VSET connector.
   b. Add the JP1 jumper and manually adjust RV1. Manual action requires an external 3.3V or 5V VCC voltage (V_{CC}) as a pull-up power supply.
3. Switch SW2 to the top side (Terminal 3 in Figure 1 on page 3) to enable the external step signal input from the EXT_STEP connector.
4. Connect the step signal to the EXT_STEP connector.
5. Set the input control and logic signal through the CN1 connector via the external MCU, or manually through SW1. Manual action requires an external 3.3V or 5V V_{CC} as a pull-up power supply.

MPS Proprietary Information. Patent Protected. Unauthorized Photocopy and Duplication Prohibited.
© 2022 MPS. All Rights Reserved.

EVALUATION BOARD SCHEMATIC

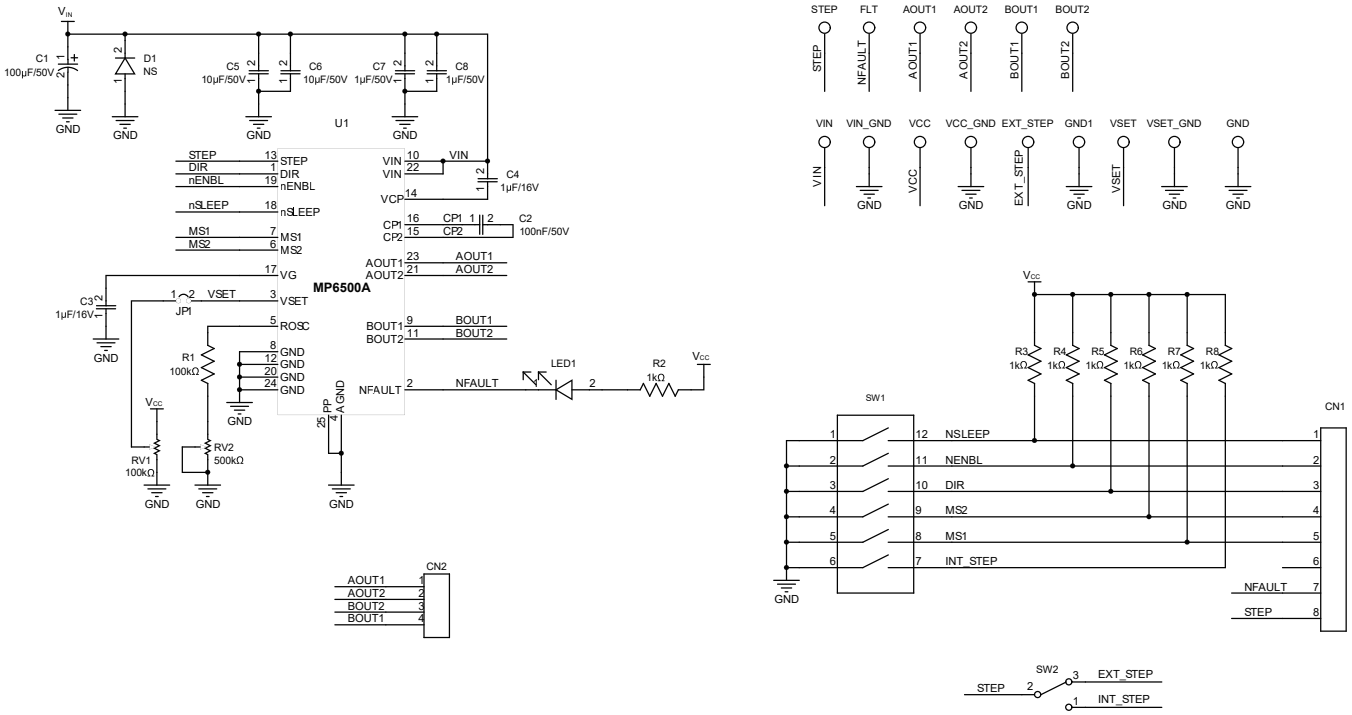

Figure 1: Evaluation Board Schematic

MPS Proprietary Information. Patent Protected. Unauthorized Photocopy and Duplication Prohibited.
© 2022 MPS. All Rights Reserved.

EV6500A-U-00A BILL OF MATERIALS

Qty	Ref	Value	Description	Package	Manufacturer	Manufacturer PN
1	C1	100µF	Electrolytic capacitor, 50V	DIP	Rubycon	50YXF100MEPA
1	C2	100nF	Ceramic capacitor, 50V, X7R	0603	Murata	GRM188R71H104KA93D
2	C3, C4	1µF	Ceramic capacitor, 16V, X7R	0603	Murata	GRM188R71C105KA12D
2	C5, C6	10µF	Ceramic capacitor, 50V, X7R	1210	Murata	GRM32ER71H106KA12L
2	C7, C8	1µF	Ceramic capacitor, 50V, X7R	0805	Wurth	885012207103
1	R1	100kΩ	Film resistor, 1%	0603	Yageo	RC0603FR-07100KL
7	R2, R3, R4, R5, R6, R7, R8	1kΩ	Film resistor, 1%	0603	Yageo	RC0603FR-071KL
1	RV1	100kΩ	Square trimming potentiometer	DIP	Bourns	3266W-1-104LF
1	RV2	500kΩ	Square trimming potentiometer	DIP	Bourns	3266W-1-504LF
1	LED1	50mW	Red LED	0805	Baihong	BL-HUE35A-AV-TRB
1	SW1	25mA	6-bit dial switch	SMD	Wurth	416131160806
1	SW2	500mA	Switch slide SPDT	DIP	Any	
1	CN1	2.54mm	8-bit connector	DIP	Any	
1	CN2	2.54mm	4-bit connector	DIP	Any	
1	JP1	2.54mm	2-bit connector	DIP	Any	
1	JP1	2.54mm	Short jumper	DIP	Any	
1	D1	NS				
2	STEP, FLT	Yellow	Test point	DIP	Any	
2	VIN, VIN_GND	2mm	Connector, φ = 2mm	DIP	Any	
11	VCC, EXT_STEP, VSET, AOUT1, AOUT2, BOUT1, BOUT2, GND1, GND2, GND3, GND4	1mm	Connector, φ = 1mm	DIP	Any	
1	U1	MP6500A	35V, 2.5A, stepper motor driver	QFN-24 (5mmx 5mm)	MPS	MP6500AGU

MPS Proprietary Information. Patent Protected. Unauthorized Photocopy and Duplication Prohibited.
© 2022 MPS. All Rights Reserved.

PCB LAYOUT

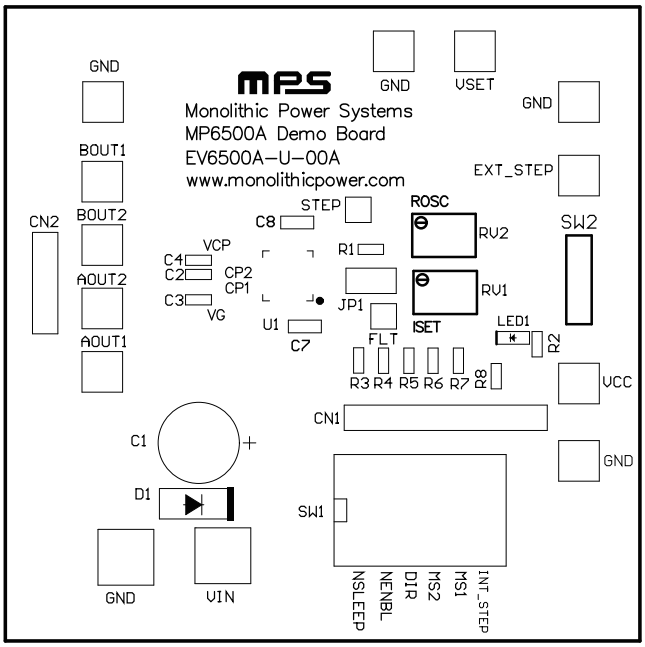

Figure 2: Top Silk

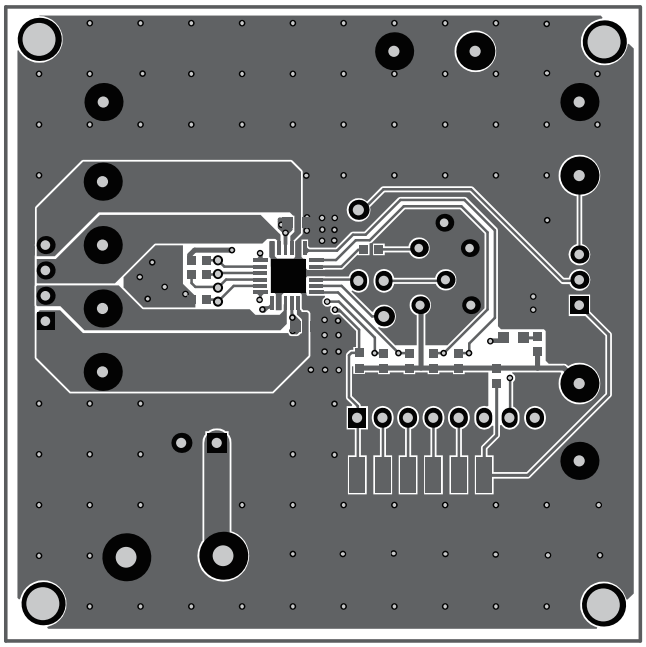

Figure 3: Top Layer

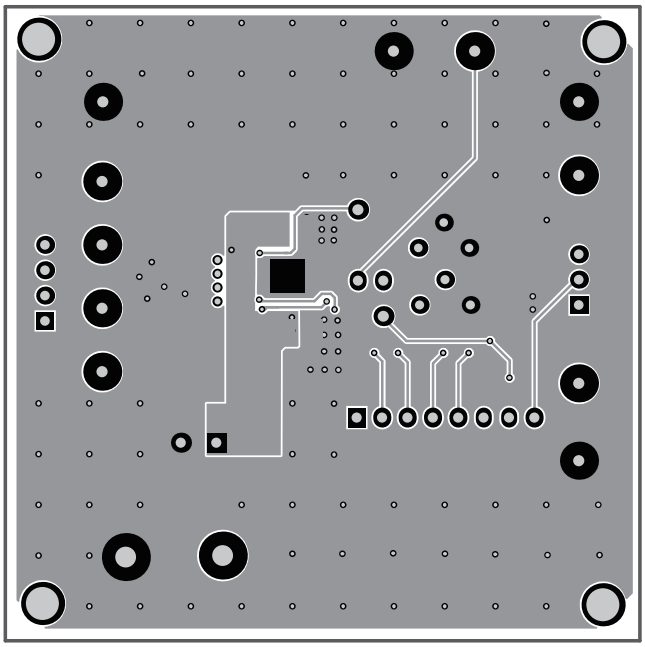

Figure 4: Bottom Layer

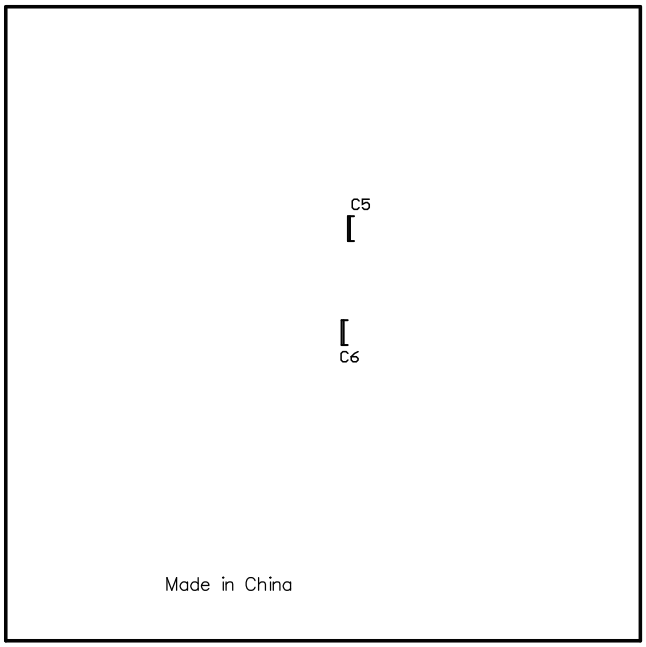

Figure 5: Bottom Silk

MPS Proprietary Information. Patent Protected. Unauthorized Photocopy and Duplication Prohibited.
© 2022 MPS. All Rights Reserved.

REVISION HISTORY

Revision #	Revision Date	Description	Pages Updated
1.0	5/12/2022	Initial Release	-

Notice: The information in this document is subject to change without notice. Please contact MPS for current specifications. Users should warrant and guarantee that third-party Intellectual Property rights are not infringed upon when integrating MPS products into any application. MPS will not assume any legal responsibility for any said applications.

MPS Proprietary Information. Patent Protected. Unauthorized Photocopy and Duplication Prohibited.
© 2022 MPS. All Rights Reserved.