TTC-6-TVSD-C-24DC-PT-I - Surge protection device

2906848

https://www.phoenixcontact.com/us/products/2906848

Please be informed that the data shown in this PDF document is generated from our online catalog. Please find the complete data in the user documentation. Our general terms of use for downloads are valid.



Fine surge protection with integrated status indicator for a signal wire with grounded reference potential.

Your advantages

- Space-saving and cost-saving with a narrow overall width of just 6 mm
- Continuous monitoring of protective devices, plus mechanical status indicator with optional remote signaling
- Finding the right product for all possible requirements in MCR applications is easy, thanks to the complete range of products with customized features

Commercial data

Item number	2906848
Packing unit	1 pc
Minimum order quantity	1 pc
Sales key	CL23
Product key	CL2265
Catalog page	Page 148 (C-4-2019)
GTIN	4055626137049
Weight per piece (including packing)	27.25 g
Weight per piece (excluding packing)	22.7 g
Customs tariff number	85363010
Country of origin	DE

Technical data

Product properties

Product type	Surge protection for MCR technology
Product family	TERMITRAB complete
IEC test classification	C3
Type	DIN rail module, one-piece
Surge protection fault message	optical

Insulation characteristics

Overvoltage category	III
Pollution degree	2

Electrical properties

Nominal voltage U_N	24 V DC

Connection data

Connection method	Push-in connection
Conductor cross section flexible	0.2 mm² ... 2.5 mm²
Conductor cross section rigid	0.2 mm² ... 4 mm²
Conductor cross section AWG	24 ... 12

Dimensions

Dimensional drawing	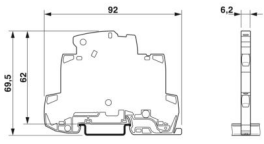
Width	6.2 mm
Height	92 mm
Depth	69.5 mm (incl. DIN rail 7.5 mm)

Material specifications

Color	gray (RAL 7042)
Flammability rating according to UL 94	V-0
Insulating material	PBT
Housing material	PBT

Mechanical properties

Mechanical data

Open side panel	Yes

Protective circuit

Direction of action	Line-Earth Ground

Maximum continuous voltage U_C	30 V DC
	21 V AC
Rated current	10 A (60 °C)
Operating effective current I_C at U_C	≤ 5 µA
Residual current I_{PE}	≤ 5 µA
Nominal discharge current I_n (8/20) µs (line-ground)	150 A
Voltage protection level U_p (line-earth)	≤ 50 V (C3 - 25 A)
	≤ 50 V (C3 - 30 A)
Response time t_A (line-earth)	≤ 1 ns
Input attenuation aE, asym.	typ. 0.3 dB (≤ 520 kHz / 150 Ω)
Cut-off frequency fg (3 dB), asym. (PE) in 150 Ω system	typ. 1.7 MHz
Capacity (Core-Earth)	1.5 nF
Resistance per path	≤ 100 mΩ
Surge protection fault message	optical
Impulse durability (line-earth)	C3 - 30 A

Environmental and real-life conditions

Ambient conditions

Degree of protection	IP20 (with end cover)
Ambient temperature (operation)	-40 °C ... 85 °C
Ambient temperature (storage/transport)	-40 °C ... 85 °C
Altitude	≤ 4000 m (amsl)
Permissible humidity (operation)	5 % ... 95 %

Standards and regulations

Standards/specifications	IEC 61643-21
Note	2000 + corrigendum 2001 + A1:2008, modified + A2:2012

EN 61643-21

Standards/specifications	EN 61643-21
Note	2001 + A1:2009 + A2:2013

Mounting

Mounting type	DIN rail: 35 mm

Drawings

Diagram

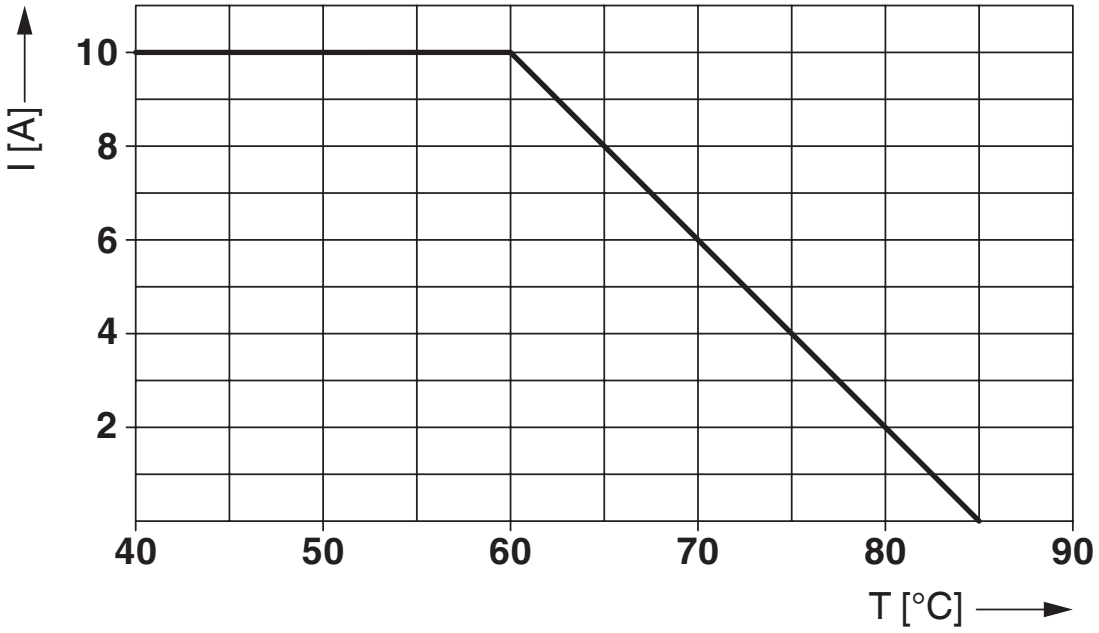

Dimensional drawing

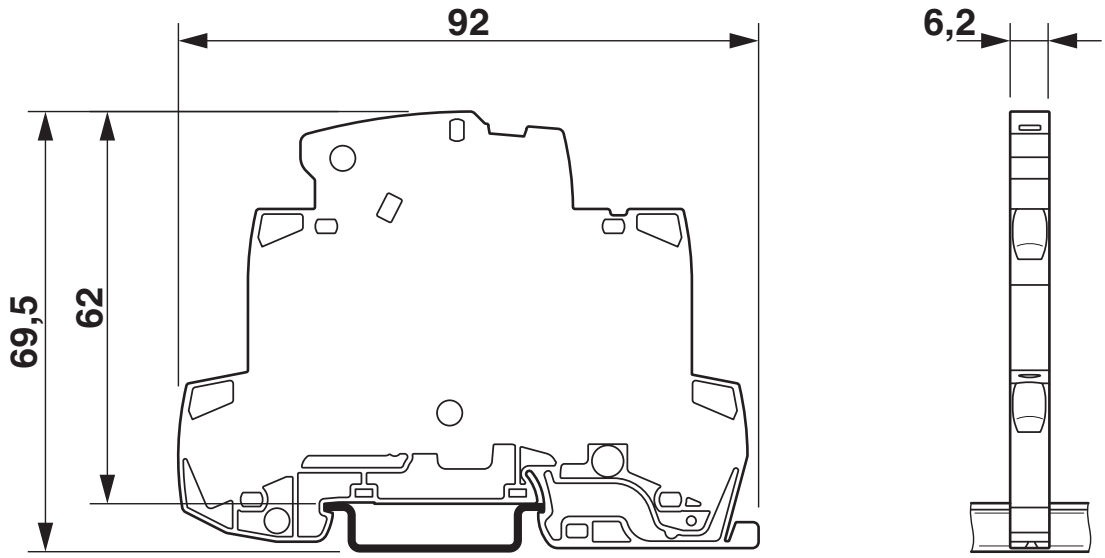

Circuit diagram

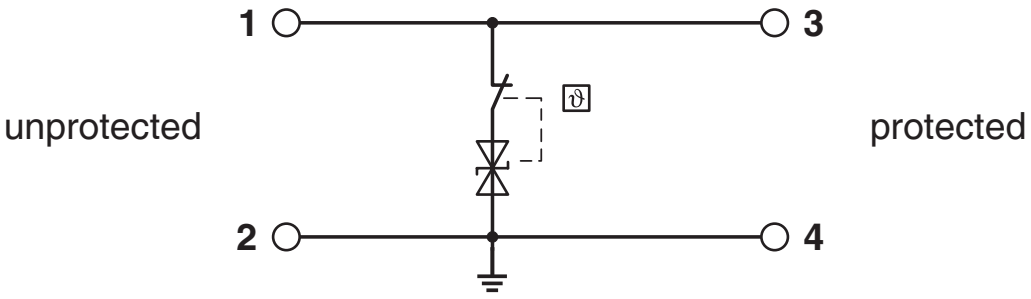

Approvals

To download certificates, visit the product detail page: https://www.phoenixcontact.com/us/products/2906848

CSA
Approval ID: 70136717

DNV GL
Approval ID: TAE000027G

UL Listed
Approval ID: FILE E 138168

CSAus
Approval ID: 70136717

UAE-RoHS
Approval ID: 22-06-16783

Functional Safety
Approval ID: 16-06-072 R024 V2R0

cCSAus

Classifications

ECLASS

ECLASS-11.0	27130807
ECLASS-13.0	27171501

ETIM

ETIM 9.0	EC001625

UNSPSC

UNSPSC 21.0	39121600

Environmental product compliance

EU RoHS

Fulfills EU RoHS substance requirements	Yes
Exemption	7(a), 7(c)-I

China RoHS

Environment friendly use period (EFUP)	EFUP-50
	An article-related China RoHS declaration table can be found in the download area for the respective article under "Manufacturer declaration". For all articles with EFUP-E, no China RoHS declaration table issued and required.

EU REACH SVHC

REACH candidate substance (CAS No.)	Lead(CAS: 7439-92-1)
SCIP	87bc218d-c234-42aa-9990-18076b4548e2

Accessories

ZBF 6 CUS - Zack Marker strip, flat

0825027

https://www.phoenixcontact.com/us/products/0825027



Zack Marker strip, flat, Strip, can be ordered: Strip, white, labeled according to customer specifications, mounting type: snap into flat marker groove, for terminal block width: 6.2 mm, lettering field size: 5.15 x 6.15 mm, Number of individual labels: 10

ZBF 6:UNBEDRUCKT - Zack Marker strip, flat

0808710

https://www.phoenixcontact.com/us/products/0808710



Zack Marker strip, flat, Strip, white, unlabeled, can be labeled with: PLOTMARK, CMS-P1-PLOTTER, mounting type: snapped, for terminal block width: 6.2 mm, lettering field size: 5.15 x 6.15 mm, Number of individual labels: 10

ZBF 6/WH-100:UNBEDRUCKT - Zack Marker strip, flat

0808736

https://www.phoenixcontact.com/us/products/0808736



Zack Marker strip, flat, Strip, white, unlabeled, can be labeled with: PLOTMARK, CMS-P1-PLOTTER, mounting type: snapped, for terminal block width: 6.2 mm, lettering field size: 5.15 x 6.15 mm, Number of individual labels: 1000

ZBF 6,QR:FORTL.ZAHLEN - Zack Marker strip, flat

0808765

https://www.phoenixcontact.com/us/products/0808765



Zack Marker strip, flat, Strip, white, labeled, Printed vertically: consecutive numbers 1 ... 10, 11 ... 20, etc. up to 91 ... 100, mounting type: snapped, for terminal block width: 6.2 mm, lettering field size: 5.15 x 6.15 mm, Number of individual labels: 10

CLIPFIX 35-5 - End bracket

3022276

https://www.phoenixcontact.com/us/products/3022276



Quick mounting end clamp for NS 35/7,5 DIN rail or NS 35/15 DIN rail, with marking option, with parking option for FBS...5, FBS...6, KSS 5, KSS 6, width: 5. 15 mm, color: gray

TTC-6-FMRS-PT - Remote signaling set

2907811

https://www.phoenixcontact.com/us/products/2907811



Module set for the optical monitoring and floating remote signaling of adjacent surge protective devices in the TERMITRAB complete or CLIXTRAB product family. Suitable for directly grounded DIN rails.

TTC-6-LCP - Cover

2908729

https://www.phoenixcontact.com/us/products/2908729



End cover for terminating a row of TERMITRAB complete TTC-6... terminal blocks

SSA 3-6 - Shield connection

2839295

https://www.phoenixcontact.com/us/products/2839295



Shield fast connection for 3 ... 6 mm cable diameter. Potential connecting cable: 200 mm, 1 mm^2, color: black

SSA 5-10 - Shield connection

2839512

https://www.phoenixcontact.com/us/products/2839512



Shield fast connection for 5 ... 10 mm cable diameter. Potential connecting cable: 200 mm, 1 mm^2, color: black

X-PEN 0,35 - Marker pen

0811228

https://www.phoenixcontact.com/us/products/0811228



Marker pen without ink cartridge, for manual labeling of markers, labeling extremely wipe-proof, line thickness 0.35 mm

Phoenix Contact 2024 © - all rights reserved
https://www.phoenixcontact.com

Phoenix Contact USA
586 Fulling Mill Road
Middletown, PA 17057, United States
(+717) 944-1300
info@phoenixcon.com