Surface Mount Multilayer Ceramic Chip Capacitors (SMD MLCCs)

High Voltage C0G Dielectric, 500 – 10,000 VDC (Commercial Grade)

Overview

KEMET's High Voltage surface mount MLCCs in C0G dielectric are temperature compensating and are suited for resonant circuit applications or those where Q and stability of capacitance characteristics are required. C0G exhibits no change in capacitance with respect to time and voltage and boasts a negligible change in capacitance with reference to ambient temperature. Capacitance change is limited to ±30ppm/°C from −55°C to +125°C.

These devices exhibit low ESR at high frequencies and find conventional use as snubbers or filters in applications such as switching power supplies and lighting ballasts. Their exceptional performance at high frequencies has made C0G high voltage the preferred dielectric choice of design engineers worldwide. In addition to Commercial Grade, Automotive Grade devices are available which meet the demanding Automotive Electronics Council's AEC–Q200 qualification requirements.

Benefits

- Operating temperature range of −55°C to +125°C
- Capacitance offerings ranging from 1 pF to 0.15 µF
- DC voltage ratings of 500 V, 630 V, 1 KV, 1.5 KV, 2 KV, 2.5 KV, 3 KV and 10KV
- EIA 0402, 0603, 0805, 1206, 1210, 1808, 1812, 1825, 2220, 2225, 2824, 3040, 3640 and 4540 case sizes
- Extremely low ESR and ESL
- High ripple current capability
- No capacitance shift with voltage
- Negligible capacitance shift with respect to temperature
- No piezoelectric noise
- Lead (Pb)-Free, RoHS and REACH compliant

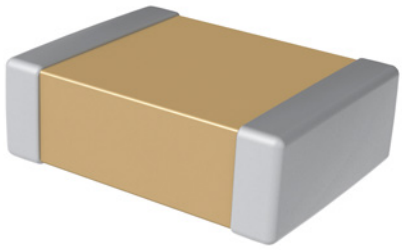

Applications

- High frequency power converters
- Wide bandgap (WBG), silicon carbide (SiC) and gallium nitride (GaN) systems
- Snubber (high dV/dT)
- Resonant circuits (LLC, Wireless Charging, etc)
- Timing
- Filtering

© KEMET Electronics Corporation • One East Broward Boulevard
Fort Lauderdale, FL 33301 USA • 954-766-2800 • www.kemet.com

Ordering Information

C	1210	C	332	J	C	G	A	C	TU
Ceramic	Case Size (L" x W")	Specification/ Series	Capacitance Code (pF)	Capacitance Tolerance[1]	Rated Voltage (VDC)	Dielectric	Failure Rate/ Design	Termination Finish[2]	Packaging/ Grade (C-Spec)
	0402 0603 0805 1206 1210 1808 1812 1825 2220 2225 2824 3040 3640 4540	C = Standard	Two significant digits and number of zeros.	B = ±0.10 pF C = ±0.25 pF D = ±0.5 pF F = ±1% G = ±2% J = ±5% K = ±10% M = ±20%	C = 500 B = 630 D = 1,000 F = 1,500 G = 2,000 Z = 2,500 H = 3,000 K = 10,000	G = C0G	A = N/A	C = 100% Matte Sn L = SnPb (5% Pb minimum)	See "Packaging C-Spec Ordering Options Table"

[1] *Additional capacitance tolerance offerings may be available. Contact KEMET for details.*
[2] *Additional termination finish options may be available. Contact KEMET for details.*

Packaging C-Spec Ordering Options Table

Packaging Type[1]	Packaging/Grade Ordering Code (C-Spec)
Bulk Bag/Unmarked	Not required (Blank)
7" Reel/Unmarked	TU
13" Reel/Unmarked	7411 (EIA 0603 and smaller case sizes) 7210 (EIA 0805 and larger case sizes)

[1] *Default packaging is "Bulk Bag". An ordering code C-Spec is not required for "Bulk Bag" packaging.*
[1] *"Bulk Bag" packaging option is not available for case sizes larger than 2225 (5664 Metric).*
[1] *The terms "Marked" and "Unmarked" pertain to laser marking option of capacitors. All packaging options labeled as "Unmarked" will contain capacitors that have not been laser marked. The option to laser mark is not available on these devices. For more information see "Capacitor Marking".*

Dimensions – Millimeters (Inches)

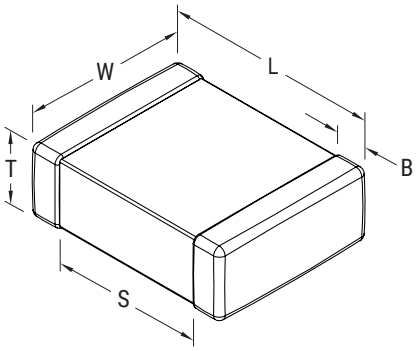

EIA Size Code	Metric Size Code	L Length	W Width	T Thickness	B Bandwidth	S Separation Minimum	Mounting Technique
0402	1005	1.00 (0.040) ±0.05 (0.002)	0.50 (0.020) ±0.05 (0.002)	See Table 2 for Thickness	0.30 (0.012) ±0.10 (0.004)	0.30 (0.012)	Solder Reflow Only
0603	1608	1.60 (0.063) ±0.15 (0.006)	0.80 (0.032) ±0.15 (0.006)		0.35 (0.014) ±0.15 (0.006)	0.50 (0.020)	Solder Wave or Solder Reflow
0805	2012	2.00 (0.079) ±0.20 (0.008)	1.25 (0.049) ±0.20 (0.008)		0.50 (0.02) ±0.25 (0.010)	0.70 (0.028)	
1206	3216	3.20 (0.126) ±0.20 (0.008)	1.60 (0.063) ±0.20 (0.008)		0.50 (0.02) ±0.25 (0.010)	1.50 (0.060)	
1210	3225	3.20 (0.126) ±0.20 (0.008)	2.50 (0.098) ±0.20 (0.008)		0.50 (0.02) ±0.25 (0.010)	1.50 (0.060)	Solder Reflow Only
1808	4520	4.70 (0.185) ±0.50 (0.020)	2.00 (0.079) ±0.20 (0.008)		0.60 (0.024) ±0.35 (0.014)	2.90 (0.114)	
1812	4532	4.50 (0.177) ±0.30 (0.012)	3.20 (0.126) ±0.30 (0.012)		0.60 (0.024) ±0.35 (0.014)	2.30 (0.091)	
1825	4564	4.50 (0.177) ±0.30 (0.012)	6.40 (0.252) ±0.40 (0.016)		0.60 (0.024) ±0.35 (0.014)	2.30 (0.091)	
2220	5650	5.70 (0.224) ±0.40 (0.016)	5.00 (0.197) ±0.40 (0.016)		0.60 (0.024) ±0.35 (0.014)	3.50 (0.138)	
2225	5664	5.60 (0.220) ±0.40 (0.016)	6.40 (0.248) ±0.40 (0.016)		0.60 (0.024) ±0.35 (0.014)	3.20 (0.126)	
2824	7260	7.10 (0.280) ±0.40 (0.016)	6.10 (0.240) ±0.40 (0.016)		1.27 (0.050) ±0.40 (0.016)	4.20 (0.165)	
3040	7610	7.60 (0.300) ±0.40 (0.016)	10.20 (0.402) ±0.40 (0.016)		1.27 (0.050) ±0.40 (0.016)	4.20 (0.165)	
3640	9210	9.10 (0.358) ±0.40 (0.016)	10.20 (0.402) ±0.40 (0.016)		1.27 (0.050) ±0.40 (0.016)	6.30 (0.248)	
4540	-	11.40 (0.449) ±0.40 (0.016)	10.20 (0.402) ±0.40 (0.016)		1.27 (0.050) ±0.40 (0.016)	6.30 (0.248)	

Qualification/Certification

Commercial Grade products are subject to internal qualification. Details regarding test methods and conditions are referenced in Table 4, Performance & Reliability.

Environmental Compliance

Lead (Pb)-free, RoHS, and REACH compliant without exemptions (excluding SnPb termination finish option).

Table 1A – Capacitance Range/Selection Waterfall (0402 – 1808 Case Sizes)

Capacitance	Cap Code	Case Size/Series	C0402C	C0603C			C0805C			C1206C					C1210C					C1808C						
		Voltage Code	C	C	B	D	C	B	D	C	B	D	F	G	C	B	D	F	G	C	B	D	F	G	Z	H
		Rated Voltage (VDC)	500	500	630	1000	500	630	1000	500	630	1000	1500	2000	500	630	1000	1500	2000	500	630	1000	1500	2000	2500	3000
		Capacitance Tolerance	Product Availability and Chip Thickness Codes See Table 2 for Chip Thickness Dimensions																							
1.0 - 9.1 pF*	109 - 919*	B C D					DG	DG	DG											LB	LB	LB	LB	LB	LB	LB
10 pF - 47pF*	100 - 470*	F G J K M					DG	DG	DG	ED	ED	ED	ED	ED	FM	FM	FM	FM	FM	LB	LB	LB	LB	LB	LB	LB
11 pF	110	F G J K M					DG	DG	DG	ED	ED	ED	ED	ED	FM	FM	FM	FM	FM	LB	LB	LB	LB	LB	LB	LB
12 pF	120	F G J K M					DG	DG	DG	ED	ED	ED	ED	ED	FM	FM	FM	FM	FM	LB	LB	LB	LB	LB	LB	LB
13 pF	130	F G J K M					DG	DG	DG	ED	ED	ED	ED	ED	FM	FM	FM	FM	FM	LB	LB	LB	LB	LB	LB	LB
15 pF	150	F G J K M					DG	DG	DG	ED	ED	ED	ED	ED	FM	FM	FM	FM	FM	LB	LB	LB	LB	LB	LB	LB
16 pF	160	F G J K M					DG	DG	DG	ED	ED	ED	ED	ED	FM	FM	FM	FM	FM	LB	LB	LB	LB	LB	LB	LB
18 pF	180	F G J K M					DG	DG	DG	ED	ED	ED	ED	ED	FM	FM	FM	FM	FM	LB	LB	LB	LB	LB	LB	LB
20 pF	200	F G J K M					DG	DG	DG	ED	ED	ED	ED	ED	FM	FM	FM	FM	FM	LB	LB	LB	LB	LB	LB	LB
22 pF	220	F G J K M					DG	DG	DG	ED	ED	ED	ED	ED	FM	FM	FM	FM	FM	LB	LB	LB	LB	LB	LB	LB
24 pF	240	F G J K M					DG	DG	DG	ED	ED	ED	ED	ED	FM	FM	FM	FM	FM	LB	LB	LB	LB	LB	LB	LB
27 pF	270	F G J K M					DG	DG	DG	ED	ED	ED	ED	ED	FM	FM	FM	FM	FM	LB	LB	LB	LB	LB	LB	LB
30 pF	300	F G J K M					DG	DG	DG	ED	ED	ED	ED	ED	FM	FM	FM	FM	FM	LB	LB	LB	LB	LB	LB	LB
33 pF	330	F G J K M					DG	DG	DG	ED	ED	ED	ED	ED	FM	FM	FM	FM	FM	LB	LB	LB	LB	LB	LB	LB
36 pF	360	F G J K M					DG	DG	DG	ED	ED	ED	ED	ED	FM	FM	FM	FM	FM	LB	LB	LB	LB	LB	LB	LB
39 pF	390	F G J K M					DG	DG	DG	ED	ED	ED	ED	ED	FM	FM	FM	FM	FM	LB	LB	LB	LB	LB	LB	LB
43 pF	430	F G J K M					DG	DG	DG	ED	ED	ED	ED	ED	FM	FM	FM	FM	FM	LB	LB	LB	LB	LB	LB	LB
47 pF	470	F G J K M					DG	DG	DG	ED	ED	ED	ED	ED	FM	FM	FM	FM	FM	LB	LB	LB	LB	LB	LB	LB
51 pF	510	F G J K M					DG	DG	DG	ED	ED	ED	ED	ED	FM	FM	FM	FM	FM	LB	LB	LB	LB	LB	LB	LB
56 pF	560	F G J K M					DG	DG	DG	ED	ED	ED	ED	ED	FM	FM	FM	FM	FM	LB	LB	LB	LB	LB	LB	LB
62 pF	620	F G J K M					DG	DG	DG	ED	ED	ED	ED	ED	FM	FM	FM	FM	FM	LB	LB	LB	LB	LB	LB	LB
68 pF	680	F G J K M					DG	DG	DG	ED	ED	ED	ED	ED	FM	FM	FM	FM	FM	LB	LB	LB	LB	LB	LB	LB
75 pF	750	F G J K M					DG	DG	DG	ED	ED	ED	ED	EF	FM	FM	FM	FM	FM	LB	LB	LB	LB	LB	LB	LB
82 pF	820	F G J K M					DG	DG	DG	ED	ED	ED	ED	EF	FM	FM	FM	FM	FM	LB	LB	LB	LB	LB	LB	LB
91 pF	910	F G J K M					DG	DG	DG	ED	ED	ED	ED	EF	FM	FM	FM	FM	FM	LB	LB	LB	LB	LB	LB	LB
100 pF	101	F G J K M	BB	CG	CG	CG	DG	DG	DG	ED	ED	ED	ED	EF	FM	FM	FM	FM	FM	LB	LB	LB	LB	LB	LC	LB
110 pF	111	F G J K M	BB	CG	CG	CG	DG	DG	DG	ED	ED	ED	ED	EG	FM	FM	FM	FM	FM	LB	LB	LB	LB	LB	LC	LB
120 pF	121	F G J K M	BB	CG	CG	CG	DG	DG	DG	ED	ED	ED	ED	EG	FG	FG	FG	FM	FM	LA	LA	LA	LA	LB	LC	LB
130 pF	131	F G J K M	BB	CG	CG	CG	DG	DG	DG	ED	ED	ED	ED	EG	FG	FG	FG	FM	FM	LA	LA	LA	LA	LB	LC	LC
150 pF	151	F G J K M	BB	CG	CG	CG	DG	DG	DG	ED	ED	ED	EF	EG	FG	FG	FG	FM	FM	LA	LA	LA	LA	LB	LC	LC
160 pF	161	F G J K M	BB	CG	CG	CG	DG	DG	DG	ED	ED	ED	EF	EG	FG	FG	FG	FM	FM	LA	LA	LA	LA	LC	LC	LC
180 pF	181	F G J K M	BB	CG	CG	CG	DG	DG	DG	ED	ED	ED	EF	EG	FG	FG	FG	FM	FM	LA	LA	LA	LA	LC	LC	LC
200 pF	201	F G J K M	BB	CG	CG	CG	DG	DG	DG	ED	ED	ED	EF	EG	FG	FG	FG	FM	FM	LA	LA	LA	LA	LC	LC	
220 pF	221	F G J K M	BB	CG	CG	CG	DG	DG	DG	ED	ED	ED	EG	EG	FG	FG	FG	FM	FM	LA	LA	LA	LA	LC	LC	
240 pF	241	F G J K M	BB	CG	CG		DG	DG	DG	ED	ED	ED	EG	EG	FG	FG	FG	FM	FM	LA	LA	LA	LB	LC	LC	
Capacitance	Cap Code	Rated Voltage (VDC)	500	500	630	1000	500	630	1000	500	630	1000	1500	2000	500	630	1000	1500	2000	500	630	1000	1500	2000	2500	3000
		Voltage Code	C	C	B	D	C	B	D	C	B	D	F	G	C	B	D	F	G	C	B	D	F	G	Z	H
		Case Size/Series	C0402C	C0603C			C0805C			C1206C					C1210C					C1808C						

**Capacitance range Includes E24 decade values only. (i.e., 10, 11, 12, 13, 15, 16, 18, 20, 22, 24, 27, 30, 33, 36, 39, 43, 47, 51, 56, 62, 68, 75, 82 and 91)*
KEMET reserves the right to substitute product with an improved temperature characteristic, tighter capacitance tolerance and/or higher voltage capability within the same form factor (configuration and dimensions).
These products are protected under US Patents 7,172,985 and 7,670,981, other patents pending, and any foreign counterparts.

Table 1A – Capacitance Range/Selection Waterfall (0402 – 1808 Case Sizes) cont.

Capacitance	Cap Code	Case Size/Series	C0402C	C0603C			C0805C			C1206C					C1210C					C1808C						
		Voltage Code	C	C	B	D	C	B	D	C	B	D	F	G	C	B	D	F	G	C	B	D	F	G	Z	H
		Rated Voltage (VDC)	500	500	630	1000	500	630	1000	500	630	1000	1500	2000	500	630	1000	1500	2000	500	630	1000	1500	2000	2500	3000
		Capacitance Tolerance	Product Availability and Chip Thickness Codes See Table 2 for Chip Thickness Dimensions																							
270 pF	271	F G J K M	BB	CG	CG		DG	DG	DG	ED	ED	ED	EG	EG	FG	FG	FG	FK	FK	LA	LA	LA	LB	LC	LC	
300 pF	301	F G J K M	BD	CG	CG		DG	DG	DN	ED	ED	EF	EG		FG	FG	FG	FK	FK	LA	LA	LA	LB	LC	LC	
330 pF	331	F G J K M	BD	CG	CG		DG	DG	DN	ED	ED	EF	EG		FG	FG	FG	FK	FK	LA	LA	LA	LB	LC	LC	
360 pF	361	F G J K M		CG	CG		DG	DG	DN	ED	ED	EF	EG		FG	FG	FG	FK	FS	LA	LA	LA	LB	LA	LC	
390 pF	391	F G J K M		CG	CG		DG	DG	DN	ED	ED	EF	EG		FG	FG	FG	FK	FS	LA	LA	LA	LB	LA	LC	
430 pF	431	F G J K M		CG	CG		DG	DG	DP	ED	ED	EF	EG		FG	FM	FM	FS	FS	LA	LB	LB	LC	LA		
470 pF	471	F G J K M		CG	CG		DG	DG	DP	ED	ED	EG	EG		FG	FM	FM	FS	FS	LA	LB	LB	LC	LA		
510 pF	511	F G J K M		CG	CG		DG	DG	DP	ED	ED	EG	EG		FG	FM	FM	FS	FS	LA	LB	LB	LC	LB		
560 pF	561	F G J K M		CG	CG		DG	DG	DG	ED	ED	EG	EG		FG	FM	FM	FS	FS	LA	LB	LB	LC	LB		
620 pF	621	F G J K M		CG	CG		DG	DG	DG	ED	ED	EG			FG	FM	FM	FS	FS	LA	LB	LB	LA	LC		
680 pF	681	F G J K M		CG	CG		DG	DG	DG	ED	ED	EG			FG	FM	FM	FS	FS	LB	LB	LB	LA	LC		
750 pF	751	F G J K M					DG	DG	DG	ED	EF	EG			FG	FM	FM	FM		LB	LB	LB	LA			
820 pF	821	F G J K M					DG	DG	DG	ED	EF	EG			FG	FM	FM	FM		LB	LB	LB	LA			
910 pF	911	F G J K M					DN	DN		ED	EF	EG			FM	FM	FM	FY		LB	LB	LB	LA			
1,000 pF	102	F G J K M					DN	DN		ED	EF	EG			FM	FM	FM	FY		LB	LB	LB	LB			
1,100 pF	112	F G J K M					DN	DN		EF	EG	ED			FM	FK	FK	FS		LC	LC	LC	LB			
1,200 pF	122	F G J K M					DN	DN		EF	EG	ED			FM	FK	FK	FS		LC	LC	LC	LC			
1,300 pF	132	F G J K M					DN	DN		EF	EG	ED			FM	FS	FS			LC	LC	LC	LC			
1,500 pF	152	F G J K M					DP	DP		EF	EG	ED			FK	FS	FS			LC	LC	LC	LC			
1,600 pF	162	F G J K M					DP	DP		EF	EG	ED			FK	FS	FS			LC	LC	LC				
1,800 pF	182	F G J K M					DG	DG		EF	EG	EF			FK	FS	FS			LC	LC	LC				
2,000 pF	202	F G J K M					DG	DG		EG	EB	EF			FK	FL	FS			LC	LA	LB				
2,200 pF	222	F G J K M					DG	DG		EG	EB	EF			FK	FL	FS			LC	LA	LB				
2,400 pF	242	F G J K M					DG	DG		EG	EB	EG			FS	FL	FS			LC	LA	LB				
2,700 pF	272	F G J K M					DG	DG		EG	EB	EG			FS	FL	FS			LC	LA	LC				
3,000 pF	302	F G J K M								EB	EB				FS	FL	FF			LA	LA	LA				
3,300 pF	332	F G J K M								EB	EB				FS	FM	FG			LA	LA	LA				
3,600 pF	362	F G J K M								EC	EC				FL	FM	FG			LA	LB	LA				
3,900 pF	392	F G J K M								EC	EC				FL	FY	FL			LA	LB	LA				
4,300 pF	432	F G J K M								ED	ED				FM	FY	FL			LA	LC	LA				
4,700 pF	472	F G J K M								ED	ED				FM	FY	FM			LA	LC	LB				
5,100 pF	512	F G J K M								EE	EE				FY	FS	FM			LA	LB	LB				
5,600 pF	562	F G J K M								EF	EF				FY	FS	FM			LB	LC	LC				
6,200pF	622	F G J K M								EF	EF				FY	FE	FY			LC	LC	LC				
6,800pF	682	F G J K M								EG	EG				FY	FE	FY			LC	LC	LC				
7,500pF	752	F G J K M								EG	EG				FS	FF	FS			LA	LA					
8,200 pF	822	F G J K M								EG	EG				FS	FF	FS			LA	LA					
9,100 pF	912	F G J K M								EG	EG				FF	FF	FS			LA	LA					
10,000 pF	103	F G J K M								EH	EH				FG	FG	FS			LA	LA					
12,000 pF	123	F G J K M								EG					FG	FG	FM			LA	LA					
15,000 pF	153	F G J K M								EG					FM	FM	FS			LB	LB					
18,000 pF	183	F G J K M													FM	FM	FS			LC	LC					
22,000 pF	223	F G J K M													FY	FY	FS									
27,000 pF	273	F G J K M													FS	FS										
33,000 pF	333	F G J K M													FS	FS										
Capacitance	Cap Code	Rated Voltage (VDC)	500	500	630	1000	500	630	1000	500	630	1000	1500	2000	500	630	1000	1500	2000	500	630	1000	1500	2000	2500	3000
		Voltage Code	C	C	B	D	C	B	D	C	B	D	F	G	C	B	D	F	G	C	B	D	F	G	Z	H
		Case Size/Series	C0402C	C0603C			C0805C			C1206C					C1210C					C1808C						

**Capacitance range Includes E24 decade values only. (i.e., 10, 11, 12, 13, 15, 16, 18, 20, 22, 24, 27, 30, 33, 36, 39, 43, 47, 51, 56, 62, 68, 75, 82 and 91)*
KEMET reserves the right to substitute product with an improved temperature characteristic, tighter capacitance tolerance and/or higher voltage capability within the same form factor (configuration and dimensions).
These products are protected under US Patents 7,172,985 and 7,670,981, other patents pending, and any foreign counterparts.

Table 1B – Capacitance Range/Selection Waterfall (1812 – 2225 Case Sizes)

**Capacitance range Includes E24 decade values only. (i.e., 10, 11, 12, 13, 15, 16, 18, 20, 22, 24, 27, 30, 33, 36, 39, 43, 47, 51, 56, 62, 68, 75, 82 and 91)*

Application Guide

Solder Fluxes and Cleaning

The use of water-soluble fluxes provides advantages of excellent solderability due to high activation. However, these fluxes contain organic acids that can induce arcing under high DC or AC voltages. Notable problem areas are underneath the MLCC where flux can be trapped between the ceramic material and PCB. It is therefore critical that PCBs are properly cleaned to remove all flux residue to maintain reliability.

Coating for High Voltage MLCCs

For MLCC ratings ≥1500V, it is recommended to apply a conformal coating to MLCC to prevent surface arcing. To reduce possibility of inducing cracks in the MLCC, select a coating with thermal expansions close to that of the MLCC.

Dielectric	CTE (ppm/°C)
Class II $BaTiO_3$	10.7
Class I $CaZrO_3$	9.8

Slits in PCB

It is recommended to apply a slit in the PCB under the MLCC to improve washing of flux residue that may get trapped underneath. In some cases, it is not possible to slit entirely through the PCB due to underlying metal planes. It is also acceptable to apply a recessed slit under the MLCC which will also promote cleaning.

- Recommended for case sizes ≥1206
- The width (w) of the slit should be 1mm
- Length of the slit should be as short as possible to prevent damaging the MLCC due to mechanical stress of the PCB.
- Slits also reduce the risk of solder balls under MLCC which decreased the creepage distance.

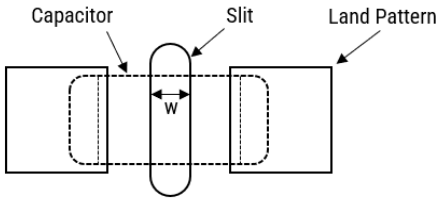

Solder Resist

If a slit cannot be applied as above, it is recommended to not use solder resist directly under the MLCC. The use of solder resist material reduces the distance between MLCC ceramic material and PCB thus making it difficult to clean.

Solder Balls

Improper reflow techniques and/or improper washing can induce solder balls under or adjacent to the MLCC. Solder balls reduce the creepage distance between the MLCC terminations and increase the risk of arcing or damage to the ceramic material. To reduce the risk of solder balls:

- Follow KEMET's solder recommendations as outlined in the datasheet.
- If performing a cleaning procedure, properly clean the PCB per KEMET's cleaning recommendations.
- Add slit to the PCB as shown above.

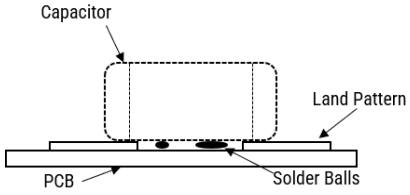

KEMET Electronics Corporation Sales Offices

For a complete list of our global sales offices, please visit www.kemet.com/sales.

Disclaimer

YAGEO Corporation and its affiliates do not recommend the use of commercial or automotive grade products for high reliability applications or manned space flight.

All product specifications, statements, information and data (collectively, the "Information") in this datasheet are subject to change. The customer is responsible for checking and verifying the extent to which the Information contained in this publication is applicable to an order at the time the order is placed. All Information given herein is believed to be accurate and reliable, but it is presented without guarantee, warranty, or responsibility of any kind, expressed or implied.

Statements of suitability for certain applications are based on KEMET Electronics Corporation's ("KEMET") knowledge of typical operating conditions for such applications, but are not intended to constitute – and KEMET specifically disclaims – any warranty concerning suitability for a specific customer application or use. The Information is intended for use only by customers who have the requisite experience and capability to determine the correct products for their application. Any technical advice inferred from this Information or otherwise provided by KEMET with reference to the use of KEMET's products is given gratis, and KEMET assumes no obligation or liability for the advice given or results obtained.

Although KEMET designs and manufactures its products to the most stringent quality and safety standards, given the current state of the art, isolated component failures may still occur. Accordingly, customer applications which require a high degree of reliability or safety should employ suitable designs or other safeguards (such as installation of protective circuitry or redundancies) in order to ensure that the failure of an electrical component does not result in a risk of personal injury or property damage.

Although all product–related warnings, cautions and notes must be observed, the customer should not assume that all safety measures are indicated or that other measures may not be required.

KEMET is a registered trademark of KEMET Electronics Corporation.