CBMC E4 24DC/1-10A IOL - Electronic circuit breaker

2910411

https://www.phoenixcontact.com/us/products/2910411

Please be informed that the data shown in this PDF document is generated from our online catalog. Please find the complete data in the user documentation. Our general terms of use for downloads are valid.



Multi-channel electronic circuit breaker with IO-Link interface for protecting four loads at 24 V DC in the event of overload and short circuit. With electronic locking of the set nominal currents. For installation on DIN rails.

Your advantages

- System transparency, thanks to comprehensive diagnostics capabilities
- Worldwide access to the device, thanks to integration into your IO-Link infrastructure
- Secure locking, thanks to interlock
- Plan service calls more efficiently since regular service interval calls can be performed conveniently via the interface.
- Convenient error diagnostics, thanks to precise error categorization and recording
- Autonomous operation since the device is fully functional even without the IO-Link interface connection

Commercial data

Item number	2910411
Packing unit	1 pc
Minimum order quantity	1 pc
Sales key	CL14
Product key	CLA152
GTIN	4055626448572
Weight per piece (including packing)	129 g
Weight per piece (excluding packing)	125 g
Customs tariff number	85362010
Country of origin	DE

Technical data

Notes

General

Note	Repeated hard short circuits can reduce the melting integral of the integrated backup fuse.

Product properties

Product type	Device circuit breakers
Product family	CBMC
Type	DIN rail module, one-piece
Number of positions	1
No. of channels	4

Insulation characteristics

Protection class	III
Pollution degree	2

Electrical properties

General

Operating voltage	18 V DC ... 30 V DC
Rated voltage	24 V DC
Rated current I_N	max. 40 A DC (IN+)
	max. 40 A DC (per terminal position when bridging additional devices via IN+)
Rated current I_N	1 / 2 / 3 / 4 / 5 / 6 / 7 / 8 / 9 / 10 A DC (adjustable per output channel)
Rated current (pre-adjusted)	4 A
Rated surge voltage	0.5 kV
Tripping method	E (electronic)
Feedback resistance	max. 35 V DC
Required backup fuse	Only required if I_{max} of the power supply > the short-circuit switching capacity. Integrated failsafe element.
Short-circuit switching capacity	300 A
Dielectric strength	max. 35 V DC (Load circuit)
Fuse	electronic
Efficiency	> 99 %
Closed circuit current I_0	typ. 25 mA
Power dissipation	typ. 0.6 W (No-load operation)
	< 9 W (Nominal operation)
Module initialization time	1.6 s
Waiting time after switch off of a channel	5 s (at overload / short circuit)
Measuring tolerance I	± 15 %
	24 A DC (at 60 °C)

Temperature derating	28 A DC (at 54 °C)
	32 A DC (at 47 °C)
	36 A DC (at 41 °C)
	40 A DC (at 35 °C)
MTBF (IEC 61709, SN 29500)	6896552 h (at 25 °C with 21 % load)
	2597403 h (at 40°C with 34.25% load)
	443066 h (at 35 °C with 100 % load)
Fail-safe element	15 A DC (per output channel)
Contact switching type	without electrical isolation

Load circuit

Shutdown time	≤ 10 ms (for short circuit > 2.0 x I_N)
	1 s (1.2 ... 2.0 x I_N)
Undervoltage switch-off	≤ 17.8 V DC (active)
	≥ 18.8 V DC (inactive)
Overvoltage switch-off	≥ 30.5 V DC (active)
	≤ 29.5 V DC (inactive)
Max. capacitive load	40000 µF (Depending on the current setting and the short-circuit current available)
Switch-on delay	0.1 s (per output channel)

Connection data

Main circuit IN+

Connection method	Push-in connection
Stripping length	15 mm
Conductor cross-section rigid	0.2 mm² ... 10 mm²
Conductor cross-section AWG	24 ... 8
Conductor cross-section, flexible, with ferrule, with plastic sleeve	0.25 mm² ... 4 mm²
Conductor cross-section flexible, with ferrule without plastic sleeve	0.25 mm² ... 6 mm²

Main circuit IN-

Connection method	Push-in connection
Stripping length	10 mm
Conductor cross-section rigid	0.2 mm² ... 2.5 mm²
Conductor cross-section AWG	24 ... 12
Conductor cross-section, flexible, with ferrule, with plastic sleeve	0.25 mm² ... 1.5 mm²
Conductor cross-section flexible, with ferrule without plastic sleeve	0.25 mm² ... 2.5 mm²

Main circuit OUT

Connection method	Push-in connection
Stripping length	10 mm
Conductor cross-section rigid	0.2 mm² ... 2.5 mm²
Conductor cross-section AWG	24 ... 12
Conductor cross-section, flexible, with ferrule, with plastic sleeve	0.25 mm² ... 1.5 mm²

Conductor cross-section flexible, with ferrule without plastic sleeve	0.25 mm² ... 2.5 mm²

IO-Link

Connection method	Push-in connection
Stripping length	10 mm
Conductor cross-section rigid	0.2 mm² ... 1.5 mm²
Conductor cross-section AWG	24 ... 16
Conductor cross-section, flexible, with ferrule, with plastic sleeve	0.25 mm² ... 0.75 mm²
Conductor cross-section flexible, with ferrule without plastic sleeve	0.25 mm² ... 1.5 mm²

Interfaces

IO-Link

Interface type	IO-Link
Specification	V1.1
Reverse polarity protection	yes
Transmission speed	230.4 kbps (COM3)
Cycle Time	min. 40 ms
Amount of process data	8 Byte (Input data)
	3 Byte (Output data)
Nominal voltage for I/O supply	24 V DC
Current consumption	max. 30 mA (IO-Link L+)
IO-Link Vendor ID	176_{dec}, 00 $B0_{hex}$
IO-Link Device ID	393504_{dec}, 06 01 20_{hex}

Signaling

IO-Link LED off	off (No communication)
IO-Link LED green	flashing (IO-Link connection exists)
Channel LED off	off (Channel switched off)
Channel LED yellow	lit (Channel switched on, channel load > 80%)
	flashing (Programming mode active)
Channel LED green	lit (Channel switched on)
Channel LED red	lit (Channel switched off, over- or undervoltage active)
	ON temporarily (Channel switched off, 5 s cool-down phase, overload or short-circuit release)
	flashing (Channel switched off, ready to be switched back on, overload or short-circuit release)
	two flashes (Channel switched off, device total current limit 40 A exceeded)

Dimensions

Dimensional drawing	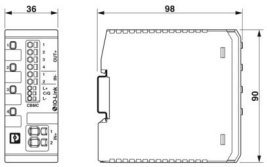
Width	36 mm
Height	90 mm
Depth	98 mm (incl. DIN rail 7.5 mm)

Material specifications

Color	light gray (RAL 7035)
Material	PC
	PA 6.6
	PA 6.3T
	POM
Flammability rating according to UL 94	V-0

Environmental and real-life conditions

Ambient conditions

Degree of protection	IP20
Ambient temperature (operation)	-25 °C ... 60 °C
Ambient temperature (storage/transport)	-40 °C ... 70 °C
Altitude	≤ 3000 m up to 52 °C (amsl)
	≤ 4000 m up to 46 °C (amsl)
Humidity test	96 h, 95 % RH, 40 °C
Shock (operation)	30g (IEC 60068-2-27, Test Ea)
Vibration (operation)	10 Hz ... 57.6 Hz (Amplitude ±0.35 mm; in accordance with IEC 60068-2-6, Test Fc)
	57.6 Hz ... 150 Hz (Acceleration 5g; in accordance with IEC 60068-2-6, Test Fc)

Approvals

UL approval

Identification	UL/C-UL Listed UL 508
	UL Recognized UL 2367

Standards and regulations

Standards/specifications	EN 61000-6-2
Note	EMC – Immunity for industrial areas
Standards/specifications	EN 61000-6-3
Note	EMC – Emission for residential, business and commercial properties and small operations
Standards/specifications	EN 60068-2-6

Note	Environmental influences – Vibrations (sinusoidal)
Standards/specifications	EN 60068-2-27
Note	Environmental influences – Shocks
Standards/specifications	EN 60068-2-78
Note	Environmental influences – Moisture and heat, constant
Standards/specifications	EN 50178
Note	Equipping power installations with electronic equipment

Mounting

Mounting type	DIN rail: 35 mm

Drawings

Dimensional drawing

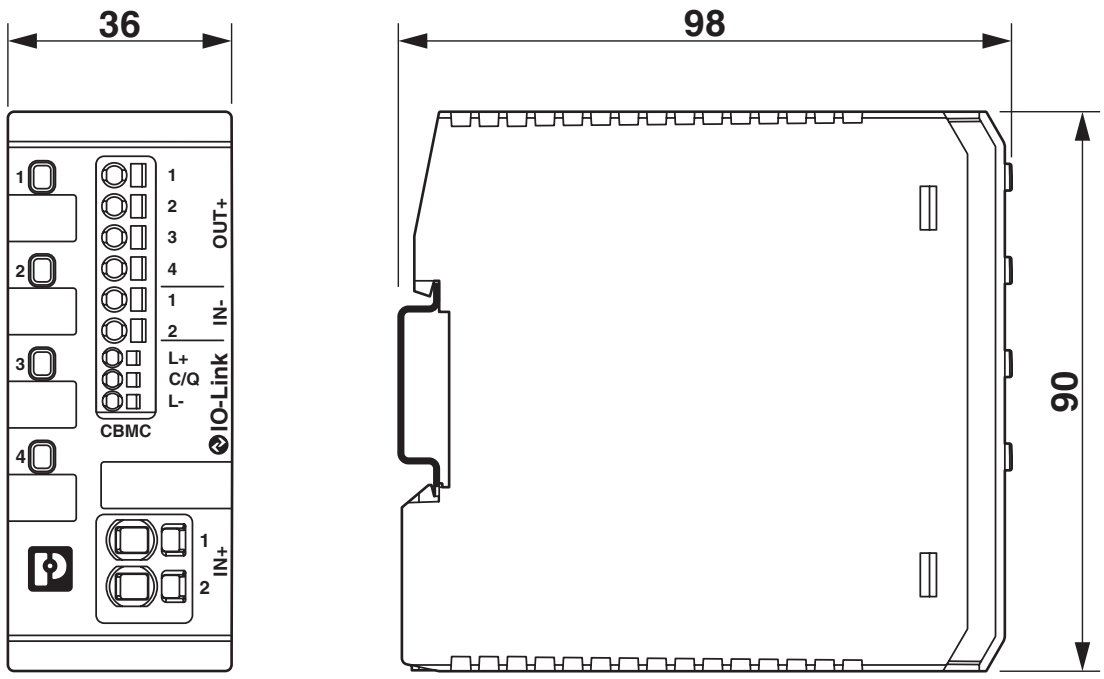

Product drawing

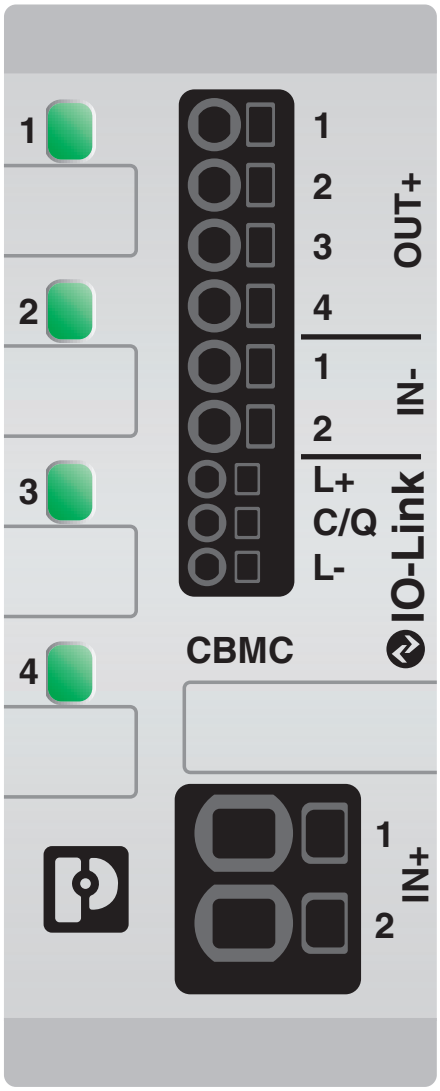

Application drawing

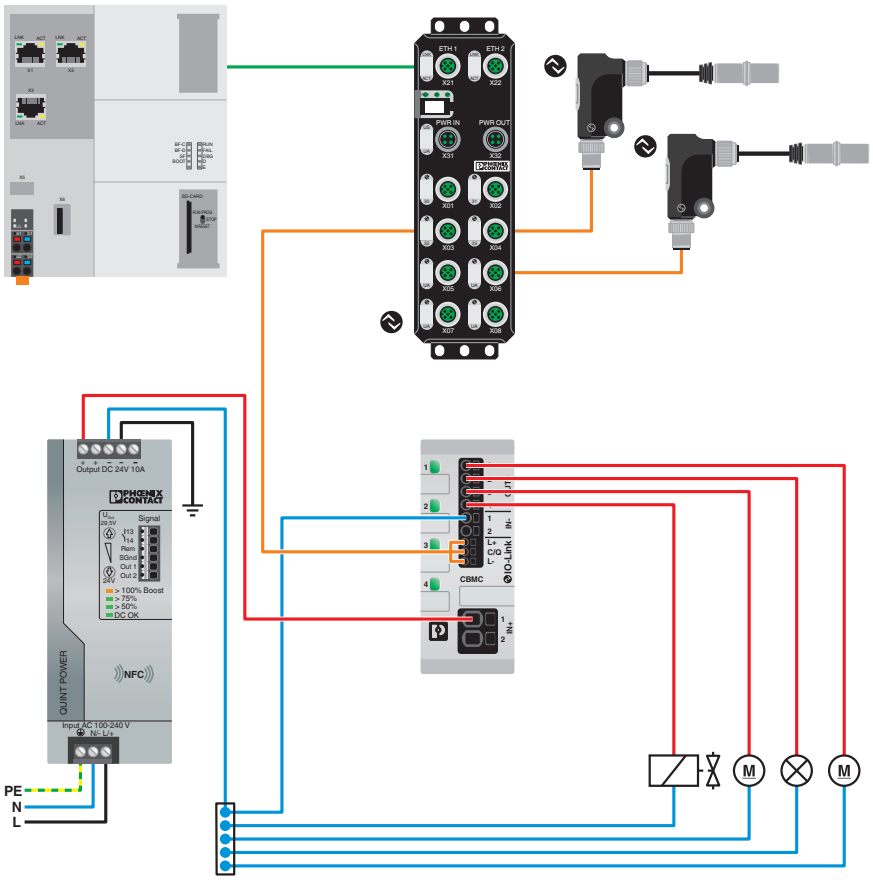

Diagram

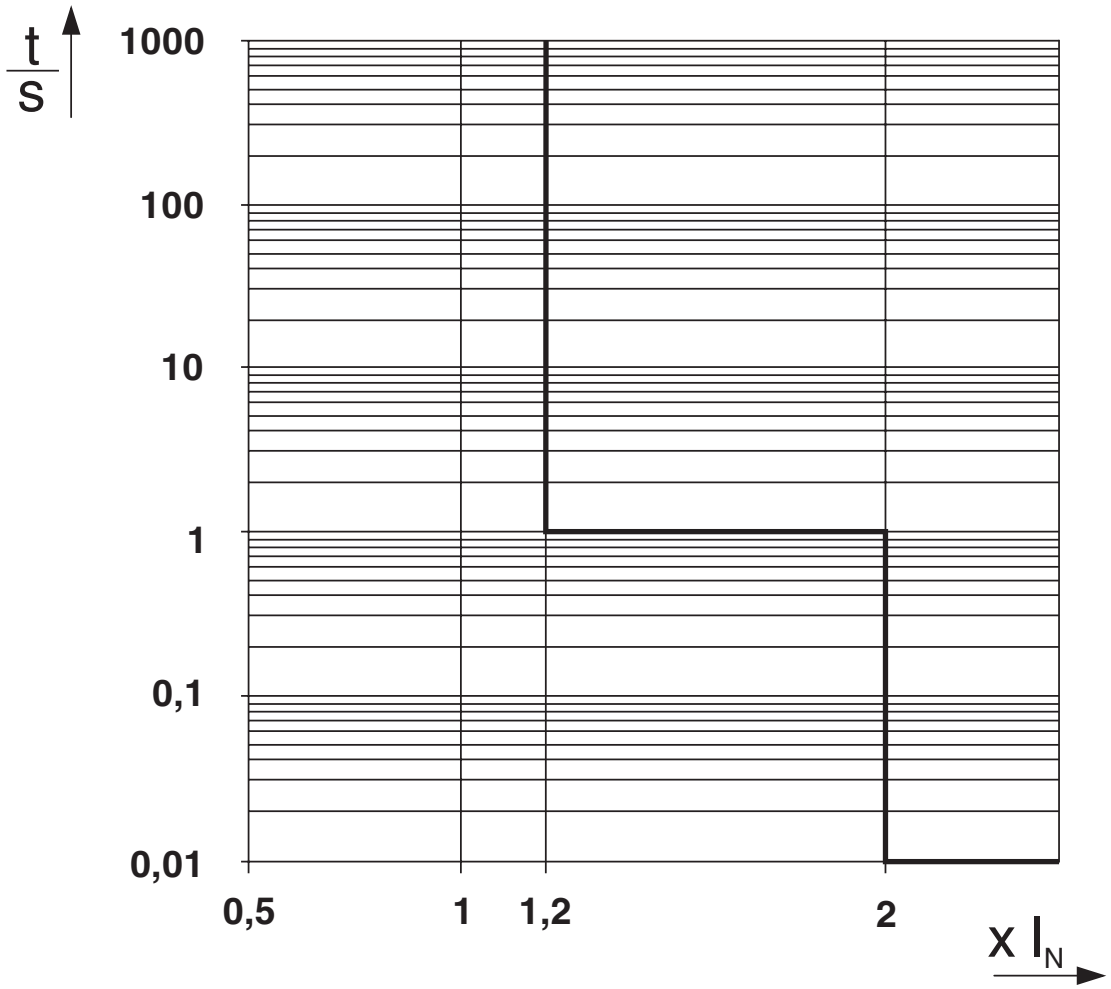

Trigger characteristic in the DC range

Diagram

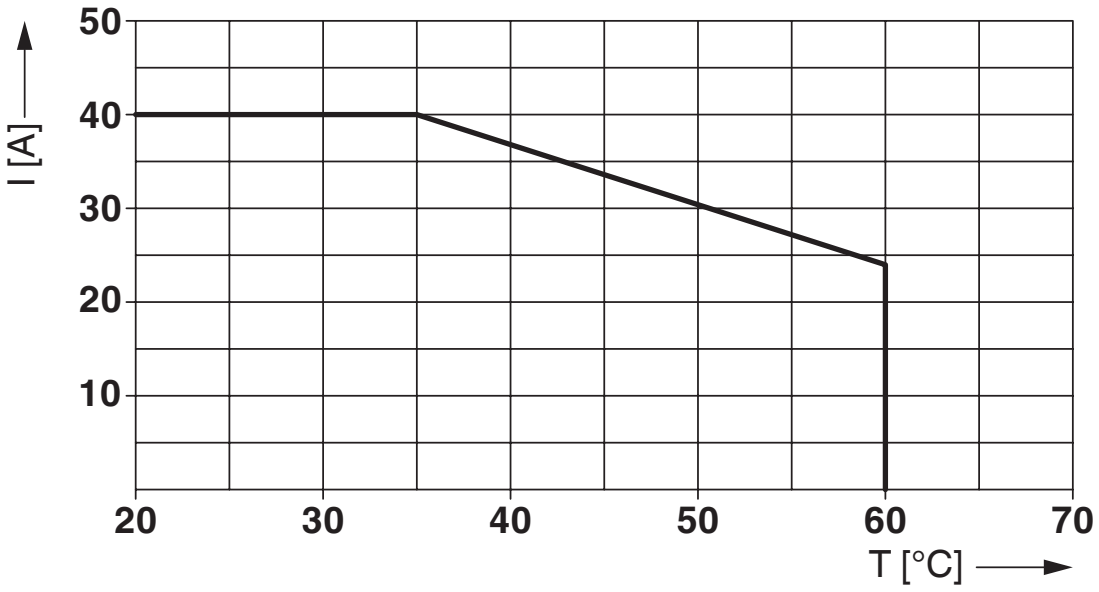

Max. permissible current in relation to the ambient temperature

Block diagram

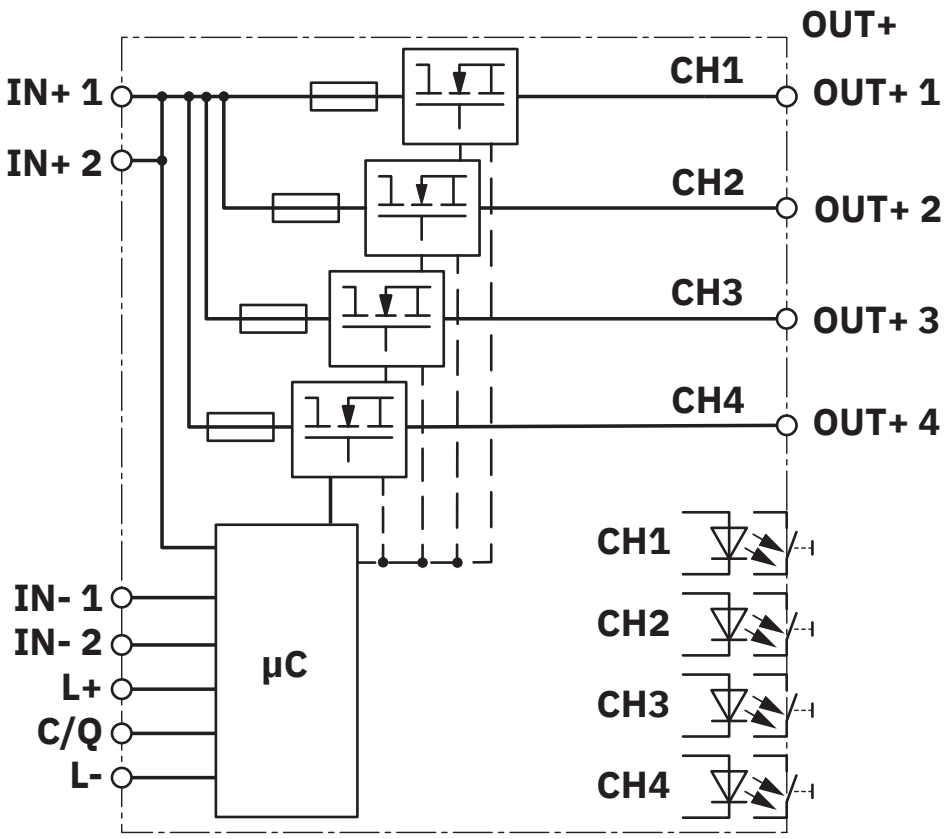

Approvals

To download certificates, visit the product detail page: https://www.phoenixcontact.com/us/products/2910411

UL Recognized
Approval ID: FILE E 317172

UL Listed
Approval ID: E123528

cUL Listed
Approval ID: E123528

Classifications

ECLASS

ECLASS-13.0	27140401
ECLASS-15.0	27140401

ETIM

ETIM 9.0	EC003538

UNSPSC

UNSPSC 21.0	39121400

Environmental product compliance

EU RoHS

Fulfills EU RoHS substance requirements	Yes
Exemption	7(a), 7(c)-I

China RoHS

Environment friendly use period (EFUP)	EFUP-50
	An article-related China RoHS declaration table can be found in the download area for the respective article under "Manufacturer declaration". For all articles with EFUP-E, no China RoHS declaration table issued and required.

EU REACH SVHC

REACH candidate substance (CAS No.)	Lead(CAS: 7439-92-1)
	Perfluorobutane sulfonic acid (PFBS) and its salts(CAS: n/a)
SCIP	0dfabd17-232e-418b-bee3-ab3fa9a917d5

Phoenix Contact 2025 © - all rights reserved
https://www.phoenixcontact.com

Phoenix Contact USA
586 Fulling Mill Road
Middletown, PA 17057, United States
(+717) 944-1300
info@phoenixcon.com