SUBCON-PLUS-CAN/AX/M12 - D-SUB bus connector

2902326

https://www.phoenixcontact.com/us/products/2902326

Please be informed that the data shown in this PDF document is generated from our online catalog. Please find the complete data in the user documentation. Our general terms of use for downloads are valid.



D-SUB connector, 9-pos., socket, assignment: 2, 3, 5, 7, 9; two M12 cable entries (A-coded) under 180° (axial). Bus system: CAN, CANopen®. Termination resistor via separate M12 terminator.

Product description

The SUBCON-PLUS fast connectors with M12 connection ensure error-free installation of bus systems, thanks to the use of fully-tested components such as cables and connectors. The innovative housing concept is lightweight yet offers optimum mechanical protection against environmental influences. This means that the fast connection plugs are ideal, even in applications subject to vibration. The unique SPEEDCON fast locking system on the M12 connections offers reliable connection with just half a turn.

Your advantages

- Assembly under field conditions
- Quick connection thanks to M12-SPEEDCON fast locking system
- Through-contacted shielding from M12 to D-SUB

Commercial data

Item number	2902326
Packing unit	1 pc
Minimum order quantity	1 pc
Sales key	DN10
Product key	DNC541
Catalog page	Page 445 (C-6-2019)
GTIN	4046356655019
Weight per piece (including packing)	62.9 g
Weight per piece (excluding packing)	62.6 g
Customs tariff number	85366990
Country of origin	CN

Technical data

Product properties

Product type	Data plug
MTTF	6706 Years (SN 29500 standard, temperature 25°C, operating cycle 21%)
	1817 Years (SN 29500 standard, temperature 40°C, operating cycle 34.25%)
	155 Years (SN 29500 standard, temperature 40°C, operating cycle 100%)
Pin assignment	2, 3, 5, 7, 9

Electrical properties

Nominal voltage U_N	5 V
Nominal current I_N	100 mA

Connection data

Tightening torque	... 0.4 Nm

D-SUB connection

Connection method	D-SUB socket

M12 connector

Connection method	M12 male, A-coded

M12 connector

Connection method	M12 female, A-coded

Interfaces

Bus system	CAN, CANopen, SafetyBus-P
Signal	CAN
	CANopen®

Dimensions

Dimensional drawing	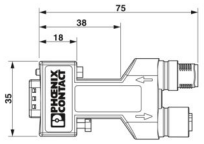
Width	16 mm
Height	75 mm
Length	38 mm

Material specifications

Material Housing	Polyamide

Environmental and real-life conditions

Ambient conditions

Degree of protection	IP40
Ambient temperature (operation)	-30 °C ... 80 °C
Ambient temperature (storage/transport)	-40 °C ... 85 °C
Ambient temperature (assembly)	-20 °C ... 80 °C
Altitude	≤ 5000 m (For restrictions, see the manufacturer's declaration for altitude operation)
Permissible humidity (operation)	10 % ... 95 % (non-condensing)
Permissible humidity (storage/transport)	5 % ... 95 % (non-condensing)

Standards and regulations

Free from substances that could impair the application of coating	in accordance with VW-AUDI-Seat central standard P-VW 3.10.7 57 65 0

Drawings

Schematic diagram

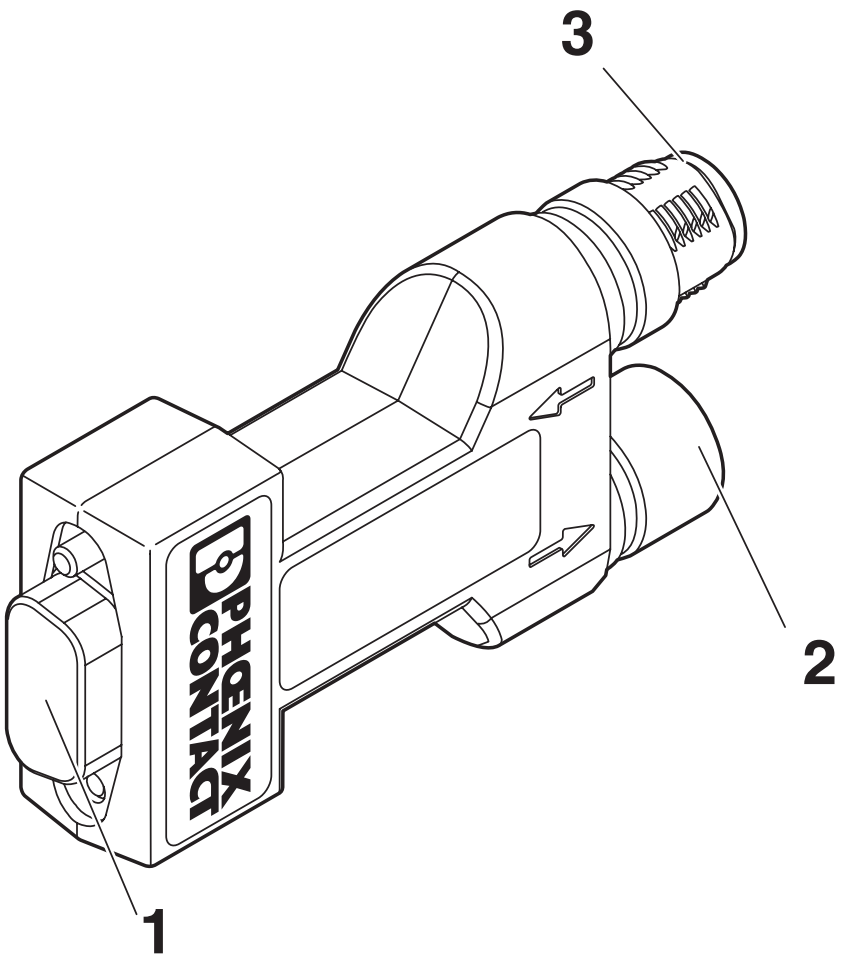

Function elements
1 = D-SUB 9
2 = Outgoing M12 connection
3 = Incoming M12 connection
4 = D-SUB PG connection (depending on the version)

Block diagram

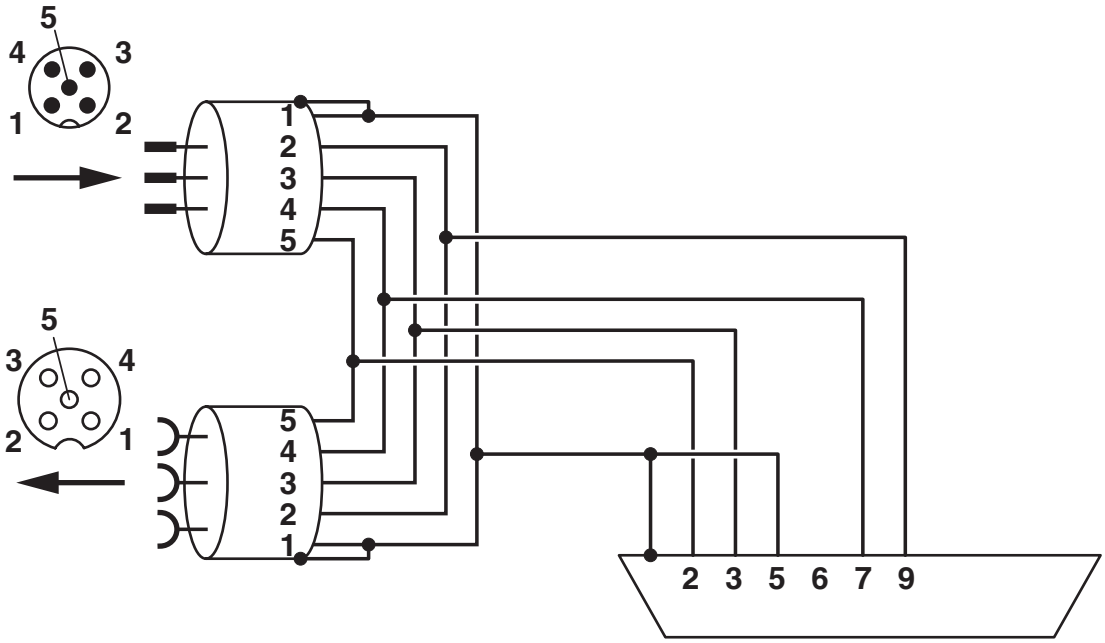

SUBCON-PLUS-CAN/...M12 function block diagram

Dimensional drawing

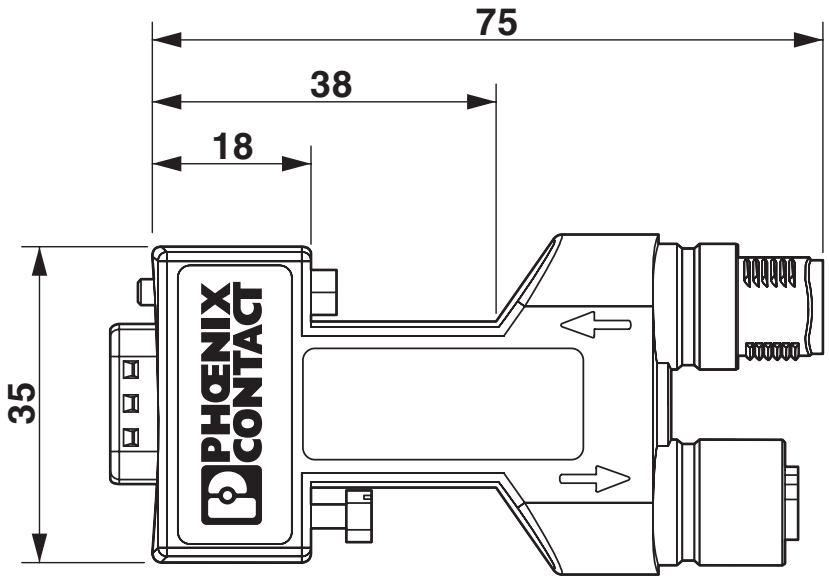

SUBCON-PLUS...AX...M12 dimensional drawing, axial (180°) version

Approvals

To download certificates, visit the product detail page: https://www.phoenixcontact.com/us/products/2902326

cUL Recognized
Approval ID: FILE E 238705

UL Recognized
Approval ID: FILE E 238705

cULus Recognized

Classifications

ECLASS

ECLASS-11.0	27440302
ECLASS-13.0	27440302
ECLASS-12.0	27440302

ETIM

ETIM 9.0	EC001132

UNSPSC

UNSPSC 21.0	39121400

Environmental product compliance

EU RoHS

Fulfills EU RoHS substance requirements	Yes
Exemption	6(c)

China RoHS

Environment friendly use period (EFUP)	EFUP-E
	No hazardous substances above the limits

EU REACH SVHC

REACH candidate substance (CAS No.)	Lead(CAS: 7439-92-1)
SCIP	d958f5aa-00a4-41be-b945-0c44901b5f01

Accessories

SAC-5P-M12MS CAN TR - Termination resistor

1507816

https://www.phoenixcontact.com/us/products/1507816



Terminating resistor CANopen®/DeviceNet™ M12

SAC-5P-M12FS CAN TR - Termination resistor

1529344

https://www.phoenixcontact.com/us/products/1529344



Terminating resistor CANopen®/DeviceNet™ M12

SAC-5P-MS/ 0,3-920/FS SCO - Bus system cable

1518258

https://www.phoenixcontact.com/us/products/1518258



Bus system cable, CANopen®, DeviceNet™, 5-position, PUR halogen-free, red lilac RAL 4001, shielded (Tinned copper braided shield), Plug straight M12 SPEEDCON, coding: A, on Socket straight M12 SPEEDCON, coding: A, cable length: 0.3 m

SAC-5P-MS/ 1,0-920/FS SCO - Bus system cable

1518274

https://www.phoenixcontact.com/us/products/1518274



Bus system cable, CANopen®, DeviceNet™, 5-position, PUR halogen-free, red lilac RAL 4001, shielded (Tinned copper braided shield), Plug straight M12 SPEEDCON, coding: A, on Socket straight M12 SPEEDCON, coding: A, cable length: 1 m

SAC-5P-MS/ 5,0-920/FS SCO - Bus system cable

1518290

https://www.phoenixcontact.com/us/products/1518290



Bus system cable, CANopen®, DeviceNet™, 5-position, PUR halogen-free, red lilac RAL 4001, shielded (Tinned copper braided shield), Plug straight M12 SPEEDCON, coding: A, on Socket straight M12 SPEEDCON, coding: A, cable length: 5 m

SAC-5P-MS-FS SCO/920/... - Bus system cable

1538157

https://www.phoenixcontact.com/us/products/1538157



Bus system cable, CANopen®, DeviceNet™, 5-position, PUR halogen-free, red lilac RAL 4001, shielded (Tinned copper braided shield), Plug straight M12 SPEEDCON, coding: A, on Socket straight M12 SPEEDCON, coding: A, cable length: Free input (0.2 ... 40.0 m)

SAC-5P-MS/ 2,0-920 SCO - Bus system cable

1518177

https://www.phoenixcontact.com/us/products/1518177

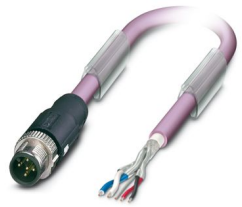

Bus system cable, CANopen®, DeviceNet™, 5-position, PUR halogen-free, red lilac RAL 4001, shielded (Tinned copper braided shield), Plug straight M12 SPEEDCON, coding: A, on free cable end, cable length: 2 m

SAC-5P-MS-FR SCO/920/... - Bus system cable

1433304

https://www.phoenixcontact.com/us/products/1433304



Bus system cable, CANopen®, DeviceNet™, 5-position, PUR halogen-free, red lilac RAL 4001, shielded (Tinned copper braided shield), Plug straight M12 SPEEDCON, coding: A, on Socket angled M12 SPEEDCON, coding: A, cable length: Free input (0.2 ... 40.0 m)

SUBCON-PLUS-CAN/90X/PG/M12 - D-SUB bus connector

2902730

https://www.phoenixcontact.com/us/products/2902730



D-SUB connector, 9-pos., socket, with Pg-D-SUB pin, assignment: 2, 3, 5, 7; 9; two M12 cable entries (A-coded) under 90°. Bus system: CAN, CANopen®. Termination resistor via separate M12 terminator.

SUBCON-PLUS-CAN/90/PG/M12 - D-SUB bus connector

2902322

https://www.phoenixcontact.com/us/products/2902322



D-SUB connector, 9-pos., socket, with Pg-D-SUB pin, assignment: 2, 3, 5, 7; 9; two M12 cable entries (A-coded) under 90°. Bus system: CAN, CANopen®. Termination resistor via separate M12 terminator.

SUBCON-PLUS-CAN/35/PG/M12 - D-SUB bus connector

2902324

https://www.phoenixcontact.com/us/products/2902324



D-SUB connector, 9-pos., socket, with Pg-D-SUB pin, assignment: 2, 3, 5, 7; 9; two M12 cable entries (A-coded) under 35°. Bus system: CAN, CANopen®. Termination resistor via separate M12 terminator.

SF-PH 0-60 - Screwdriver

1212558

https://www.phoenixcontact.com/us/products/1212558



Screwdriver, PH crosshead, size: PH 0 x 60, 2-component grip, with non-slip grip

Phoenix Contact 2024 © - all rights reserved
https://www.phoenixcontact.com

Phoenix Contact USA
586 Fulling Mill Road
Middletown, PA 17057, United States
(+717) 944-1300
info@phoenixcon.com