Surface Mount TRANSZORB® Transient Voltage Suppressors



SMC (DO-214AB)

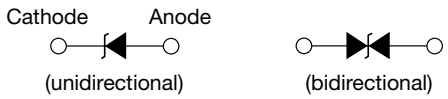

LINKS TO ADDITIONAL RESOURCES

3D Models

PRIMARY CHARACTERISTICS	
V_{WM} (unidirectional)	5.8 V to 459 V
V_{WM} (bidirectional)	5.8 V to 185 V
V_{BR} (unidirectional)	6.8 V to 540 V
V_{BR} (bidirectional)	6.8 V to 220 V
P_{PPM}	1500 W
P_D	6.5 W
I_{FSM} (uni-directional only)	200 A
T_J max.	150 °C
Polarity	Unidirectional, bidirectional
Package	SMC (DO-214AB)

DEVICES FOR BIDIRECTION APPLICATIONS

For bidirectional devices use CA suffix (e.g. 1.5SMC220CA).
Electrical characteristics apply in both directions.

FEATURES

AUTOMOTIVE GRADE Available

Pb RoHS COMPLIANT HALOGEN FREE Available

- Low profile package
- Ideal for automated placement
- Glass passivated chip junction
- Available in unidirectional and bidirectional
- 1500 W peak pulse power capability with a 10/1000 µs waveform, repetitive rate (duty cycle): 0.01 %
- Excellent clamping capability
- Very fast response time
- Low incremental surge resistance
- Meets MSL level 1, per J-STD-020, LF maximum peak of 260 °C
- AEC-Q101 qualified available
  - Automotive ordering code: base P/NHE3 or P/NHM3
- Material categorization: for definitions of compliance please see www.vishay.com/doc?99912

TYPICAL APPLICATIONS

Use in sensitive electronics protection against voltage transients induced by inductive load switching and lightning on ICs, MOSFET, signal lines of sensor units for consumer, computer, industrial, automotive, and telecommunication.

MECHANICAL DATA

Case: SMC (DO-214AB)
Molding compound meets UL 94 V-0 flammability rating
Base P/N-E3 - RoHS-compliant, commercial grade
Base P/N-M3 - halogen-free, RoHS-compliant, commercial grade
Base P/NHE3_X - RoHS-compliant and AEC-Q101 qualified
Base P/NHM3_X - halogen-free, RoHS-compliant, and AEC-Q101 qualified
("_X" denotes revision code e.g. A, B, ...)

Terminals: matte tin plated leads, solderable per J-STD-002 and JESD 22-B102
E3, M3, HE3, and HM3 suffix meets JESD 201 class 2 whisker test

Polarity: for unidirectional types the band denotes cathode end, no marking on bidirectional types

MAXIMUM RATINGS (T_A = 25 °C unless otherwise noted)			
PARAMETER	**SYMBOL**	**VALUE**	**UNIT**
Peak power dissipation with a 10/1000 µs waveform (1)(2) (fig. 1)	P_{PPM}	1500	W
Peak pulse current with a 10/1000 µs waveform (1) (fig. 3)	I_{PPM}	See next table	A
Power dissipation on infinite heatsink at T_A = 50 °C	P_D	6.5	W
Peak forward surge current 8.3 ms single half sine-wave unidirectional only (2)	I_{FSM}	200	A
Operating junction and storage temperature range	T_J, T_{STG}	-65 to +150	°C

Notes
(1) Non-repetitive current pulse, per fig. 3 and derated above T_A = 25 °C per fig. 2
(2) Mounted on 0.31" x 0.31" (8.0 mm x 8.0 mm) copper pads to each terminal

For technical questions within your region: DiodesAmericas@vishay.com, DiodesAsia@vishay.com, DiodesEurope@vishay.com
THIS DOCUMENT IS SUBJECT TO CHANGE WITHOUT NOTICE. THE PRODUCTS DESCRIBED HEREIN AND THIS DOCUMENT ARE SUBJECT TO SPECIFIC DISCLAIMERS, SET FORTH AT www.vishay.com/doc?91000

ELECTRICAL CHARACTERISTICS (T_A = 25 °C unless otherwise noted)

PART NUMBER	DEVICE MARKING CODE		BREAKDOWN VOLTAGE V_{BR} AT I_T (1) (V)		TEST CURRENT I_T (mA)	STAND-OFF VOLTAGE V_{WM} (V)	MAXIMUM REVERSE LEAKAGE AT V_{WM} I_D (4) (µA)	MAXIMUM PEAK PULSE CURRENT I_{PPM} (2) (A)	MAXIMUM CLAMPING VOLTAGE AT I_{PPM} V_C (V)	MAXIMUM TEMPERATURE COEFFICIENT OF V_{BR} (%/°C)
	UNI	BI	MIN.	MAX.						
1.5SMC6.8A	6V8A	6V8C	6.45	7.14	10	5.80	1000	143	10.5	0.057
1.5SMC7.5A	7V5A	7V5C	7.13	7.88	10	6.40	500	133	11.3	0.061
1.5SMC8.2A	8V2A	8V2C	7.79	8.61	10	7.02	200	124	12.1	0.065
1.5SMC9.1A	9V1A	9V1C	8.65	9.55	1.0	7.78	50	112	13.4	0.068
1.5SMC10A	10A	10C	9.50	10.5	1.0	8.55	10	103	14.5	0.073
1.5SMC11A	11A	11C	10.5	11.6	1.0	9.40	5.0	96.2	15.6	0.075
1.5SMC12A	12A	12C	11.4	12.6	1.0	10.2	5.0	89.8	16.7	0.078
1.5SMC13A	13A	13C	12.4	13.7	1.0	11.1	5.0	82.4	18.2	0.081
1.5SMC15A	15A	15C	14.3	15.8	1.0	12.8	1.0	70.8	21.2	0.084
1.5SMC16A	16A	16C	15.2	16.8	1.0	13.6	1.0	66.7	22.5	0.086
1.5SMC18A	18A	18C	17.1	18.9	1.0	15.3	1.0	59.5	25.2	0.089
1.5SMC20A	20A	20C	19.0	21.0	1.0	17.1	1.0	54.2	27.7	0.090
1.5SMC22A	22A	22C	20.9	23.1	1.0	18.8	1.0	49.0	30.6	0.092
1.5SMC24A	24A	24C	22.8	25.2	1.0	20.5	1.0	45.2	33.2	0.094
1.5SMC27A	27A	27C	25.7	28.4	1.0	23.1	1.0	40.0	37.5	0.096
1.5SMC30A	30A	30C	28.5	31.5	1.0	25.6	1.0	36.2	41.4	0.097
1.5SMC33A	33A	33C	31.4	34.7	1.0	28.2	1.0	32.8	45.7	0.098
1.5SMC36A	36A	36C	34.2	37.8	1.0	30.8	1.0	30.1	49.9	0.099
1.5SMC39A	39A	39C	37.1	41.0	1.0	33.3	1.0	27.8	53.9	0.100
1.5SMC43A	43A	43C	40.9	45.2	1.0	36.8	1.0	25.3	59.3	0.101
1.5SMC47A	47A	47C	44.7	49.4	1.0	40.2	1.0	23.1	64.8	0.101
1.5SMC51A	51A	51C	48.5	53.6	1.0	43.6	1.0	21.4	70.1	0.102
1.5SMC56A	56A	56C	53.2	58.8	1.0	47.8	1.0	19.5	77.0	0.103
1.5SMC62A	62A	62C	58.9	65.1	1.0	53.0	1.0	17.6	85.0	0.104
1.5SMC68A	68A	68C	64.6	71.4	1.0	58.1	1.0	16.3	92.0	0.104
1.5SMC75A	75A	75C	71.3	78.8	1.0	64.1	1.0	14.6	104	0.105
1.5SMC82A	82A	82C	77.9	86.1	1.0	70.1	1.0	13.3	113	0.105
1.5SMC91A	91A	91C	86.5	95.5	1.0	77.8	1.0	12.0	125	0.106
1.5SMC100A	100A	100C	95.0	105	1.0	85.5	1.0	10.9	137	0.106
1.5SMC110A	110A	110C	105	116	1.0	94.0	1.0	9.9	152	0.107
1.5SMC120A	120A	120C	114	126	1.0	102	1.0	9.1	165	0.107
1.5SMC130A	130A	130C	124	137	1.0	111	1.0	8.4	179	0.107
1.5SMC150A	150A	150C	143	158	1.0	128	1.0	7.2	207	0.108
1.5SMC160A	160A	160C	152	168	1.0	136	1.0	6.8	219	0.108
1.5SMC170A	170A	170C	162	179	1.0	145	1.0	6.4	234	0.108
1.5SMC180A	180A	180C	171	189	1.0	154	1.0	6.1	246	0.108
1.5SMC200A	200A	200C	190	210	1.0	171	1.0	5.5	274	0.108
1.5SMC220A	220A	220C	209	231	1.0	185	1.0	4.6	328	0.108
1.5SMC250A	250A	-	237	263	1.0	214	1.0	4.4	344	0.110
1.5SMC300A	300A	-	285	315	1.0	256	1.0	3.6	414	0.110
1.5SMC350A	350A	-	333	368	1.0	300	1.0	3.1	482	0.110
1.5SMC400A	400A	-	380	420	1.0	342	1.0	2.7	548	0.110
1.5SMC440A	440A	-	418	462	1.0	376	1.0	2.5	602	0.110
1.5SMC480A	480A	-	456	504	1.0	408	1.0	2.28	658	0.110
1.5SMC510A	510A	-	485	535	1.0	434	1.0	2.15	698	0.110
1.5SMC540A	540A	-	513	567	1.0	459	1.0	2.03	740	0.110

Notes

(1) Pulse test: $t_p \leq 50$ ms

(2) Surge current waveform per fig. 3 and derate per fig. 2

(3) All terms and symbols are consistent with ANSI/IEEE CA62.35

(4) For bidirectional types with V_R of 10 V and less, the I_D limit is doubled

(5) V_F = 3.5 V at I_F = 100 A (unidirectional only)

For technical questions within your region: DiodesAmericas@vishay.com, DiodesAsia@vishay.com, DiodesEurope@vishay.com
THIS DOCUMENT IS SUBJECT TO CHANGE WITHOUT NOTICE. THE PRODUCTS DESCRIBED HEREIN AND THIS DOCUMENT ARE SUBJECT TO SPECIFIC DISCLAIMERS, SET FORTH AT www.vishay.com/doc?91000

THERMAL CHARACTERISTICS (T_A = 25 °C unless otherwise noted)			
PARAMETER	**SYMBOL**	**VALUE**	**UNIT**
Typical thermal resistance, junction to ambient air (1)	$R_{\theta JA}$	75	°C/ W
Typical thermal resistance, junction to leads	$R_{\theta JL}$	15	

Note

(1) Mounted on minimum recommended pad layout

ORDERING INFORMATION (Example)						
PREFERRED P/N	**UNIT WEIGHT (g)**	**VOLTAGE RANGE (V)**		**PACKAGE CODE**	**BASE QUANTITY**	**DELIVERY MODE**
		UNI -	**BI -**			
1.5SMC6.8A-E3/57T	0.211	6.8 to 220	6.8 to 220	57T	850	7" diameter plastic tape and reel
1.5SMC6.8A-M3/57T	0.211	6.8 to 540	6.8 to 220	57T	850	7" diameter plastic tape and reel
1.5SMC6.8A-E3/9AT	0.211	6.8 to 220	6.8 to 220	9AT	3500	13" diameter plastic tape and reel
1.5SMC6.8A-M3/9AT	0.211	6.8 to 540	6.8 to 220	9AT	3500	13" diameter plastic tape and reel
1.5SMC6.8AHE3_A/H (1)	0.211	6.8 to 220	6.8 to 220	H	850	7" diameter plastic tape and reel
1.5SMC6.8AHM3_A/H (1)						
1.5SMC6.8AHE3_A/I (1)	0.211	6.8 to 220	6.8 to 220	I	3500	13" diameter plastic tape and reel
1.5SMC6.8AHM3_A/I (1)						
1.5SMC250AHM3_B/H (2)	0.211	250 to 540	-	H	850	7" diameter plastic tape and reel
1.5SMC250AHM3_B/I (2)	0.211	250 to 540	-	I	3500	13" diameter plastic tape and reel

Notes

(1) _A is available for 1.5SMC6.8(C)A to 1.5SMC220(C)A, AEC-Q101 qualified

(2) _B is available for 1.5SMC250A to 1.5SMC540A, AEC-Q101 qualified

For technical questions within your region: DiodesAmericas@vishay.com, DiodesAsia@vishay.com, DiodesEurope@vishay.com

THIS DOCUMENT IS SUBJECT TO CHANGE WITHOUT NOTICE. THE PRODUCTS DESCRIBED HEREIN AND THIS DOCUMENT ARE SUBJECT TO SPECIFIC DISCLAIMERS, SET FORTH AT www.vishay.com/doc?91000

RATINGS AND CHARACTERISTICS CURVES (T_A = 25 °C unless otherwise noted)

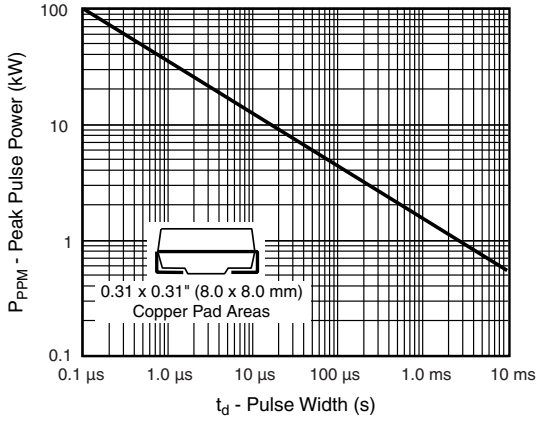

Fig. 1 - Peak Pulse Power Rating Curve

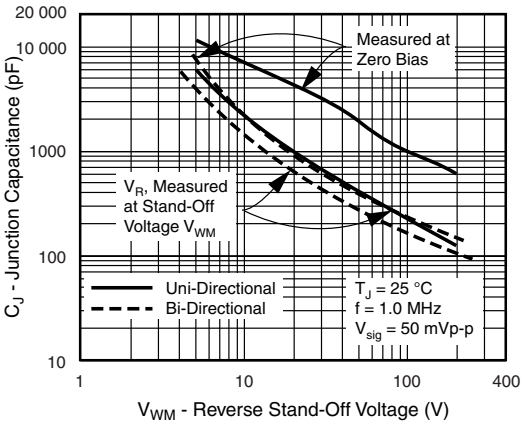

Fig. 4 - Typical Junction Capacitance Uni-Directional

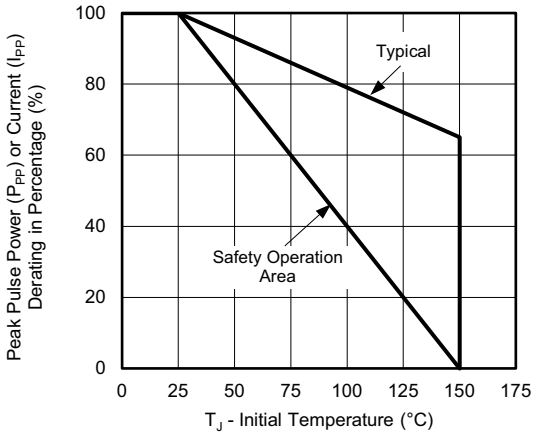

Fig. 2 - Pulse Power or Current vs. Initial Junction Temperature

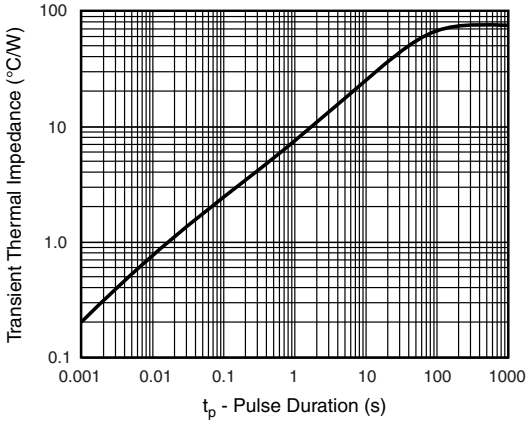

Fig. 5 - Typical Transient Thermal Impedance

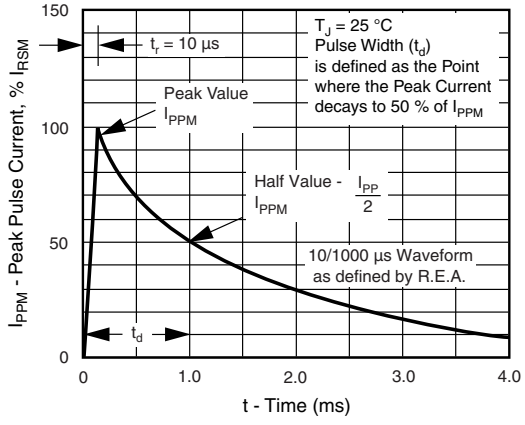

Fig. 3 - Pulse Waveform

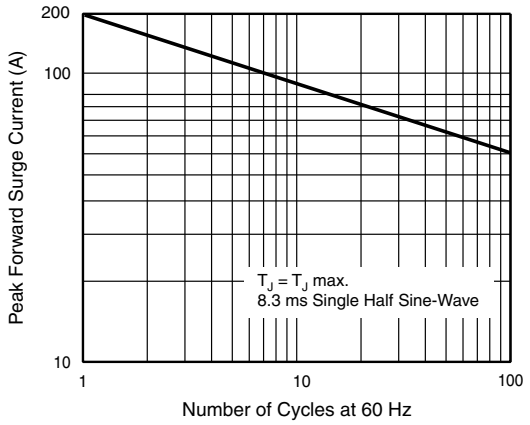

Fig. 6 - Maximum Non-Repetitive Forward Surge Current
Unidirectional Use Only

For technical questions within your region: DiodesAmericas@vishay.com, DiodesAsia@vishay.com, DiodesEurope@vishay.com
THIS DOCUMENT IS SUBJECT TO CHANGE WITHOUT NOTICE. THE PRODUCTS DESCRIBED HEREIN AND THIS DOCUMENT ARE SUBJECT TO SPECIFIC DISCLAIMERS, SET FORTH AT www.vishay.com/doc?91000

PACKAGE OUTLINE DIMENSIONS in inches (millimeters)

SMC (DO-214AB)

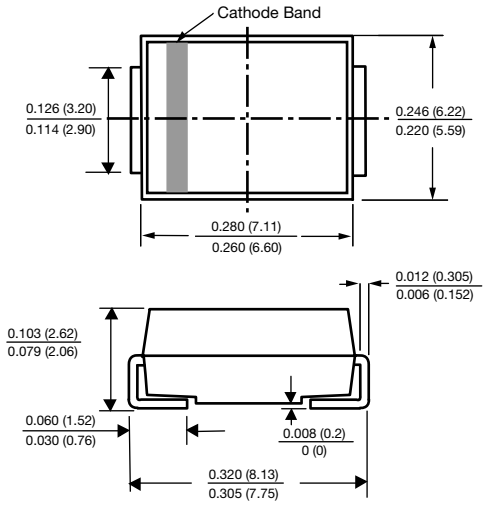

Mounting Pad Layout

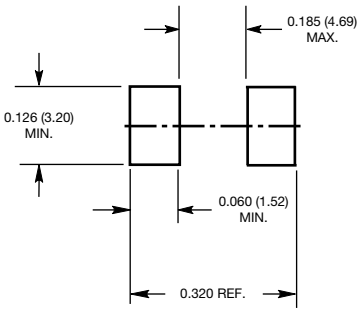

For technical questions within your region: DiodesAmericas@vishay.com, DiodesAsia@vishay.com, DiodesEurope@vishay.com

THIS DOCUMENT IS SUBJECT TO CHANGE WITHOUT NOTICE. THE PRODUCTS DESCRIBED HEREIN AND THIS DOCUMENT ARE SUBJECT TO SPECIFIC DISCLAIMERS, SET FORTH AT www.vishay.com/doc?91000

Disclaimer

ALL PRODUCT, PRODUCT SPECIFICATIONS AND DATA ARE SUBJECT TO CHANGE WITHOUT NOTICE TO IMPROVE RELIABILITY, FUNCTION OR DESIGN OR OTHERWISE.

Vishay Intertechnology, Inc., its affiliates, agents, and employees, and all persons acting on its or their behalf (collectively, “Vishay”), disclaim any and all liability for any errors, inaccuracies or incompleteness contained in any datasheet or in any other disclosure relating to any product.

Vishay makes no warranty, representation or guarantee regarding the suitability of the products for any particular purpose or the continuing production of any product. To the maximum extent permitted by applicable law, Vishay disclaims (i) any and all liability arising out of the application or use of any product, (ii) any and all liability, including without limitation special, consequential or incidental damages, and (iii) any and all implied warranties, including warranties of fitness for particular purpose, non-infringement and merchantability.

Statements regarding the suitability of products for certain types of applications are based on Vishay's knowledge of typical requirements that are often placed on Vishay products in generic applications. Such statements are not binding statements about the suitability of products for a particular application. It is the customer's responsibility to validate that a particular product with the properties described in the product specification is suitable for use in a particular application. Parameters provided in datasheets and / or specifications may vary in different applications and performance may vary over time. All operating parameters, including typical parameters, must be validated for each customer application by the customer's technical experts. Product specifications do not expand or otherwise modify Vishay's terms and conditions of purchase, including but not limited to the warranty expressed therein.

Hyperlinks included in this datasheet may direct users to third-party websites. These links are provided as a convenience and for informational purposes only. Inclusion of these hyperlinks does not constitute an endorsement or an approval by Vishay of any of the products, services or opinions of the corporation, organization or individual associated with the third-party website. Vishay disclaims any and all liability and bears no responsibility for the accuracy, legality or content of the third-party website or for that of subsequent links.

Vishay products are not designed for use in life-saving or life-sustaining applications or any application in which the failure of the Vishay product could result in personal injury or death unless specifically qualified in writing by Vishay. Customers using or selling Vishay products not expressly indicated for use in such applications do so at their own risk. Please contact authorized Vishay personnel to obtain written terms and conditions regarding products designed for such applications.

No license, express or implied, by estoppel or otherwise, to any intellectual property rights is granted by this document or by any conduct of Vishay. Product names and markings noted herein may be trademarks of their respective owners.

© 2025 VISHAY INTERTECHNOLOGY, INC. ALL RIGHTS RESERVED

THIS DOCUMENT IS SUBJECT TO CHANGE WITHOUT NOTICE. THE PRODUCTS DESCRIBED HEREIN AND THIS DOCUMENT ARE SUBJECT TO SPECIFIC DISCLAIMERS, SET FORTH AT www.vishay.com/doc?91000