HC-A10-I-CT-F - Contact insert

1585427

https://www.phoenixcontact.com/us/products/1585427

Please be informed that the data shown in this PDF document is generated from our online catalog. Please find the complete data in the user documentation. Our general terms of use for downloads are valid.



Contact insert, number of positions: 10+PE, size: D15, number of connections per position: 1, Socket, Crimp connection, 250 V, 16 A, 0.5 mm^2 ... 4 mm^2

Commercial data

Item number	1585427
Packing unit	1 pc
Minimum order quantity	1 pc
Sales key	BF61
Product key	BF7ABB
GTIN	4046356285155
Weight per piece (including packing)	28.32 g
Weight per piece (excluding packing)	22.22 g
Customs tariff number	85366990
Country of origin	CN

Technical data

Notes

General	for HC-D15 housing, CK2,5-ED crimp contacts (crimp contacts not supplied as standard)
General	Connectors may be operated only when there is no load/voltage.

Mounting

Assembly instructions	To ensure correct use, installation in housing with IP54 protection or better is required
	for plastic coding profiles: 4 pcs.

Product properties

Product type	Contact insert with a fixed no. of positions
Series	HC-A
Type	D15
Number of positions	10
Connection profile	10+PE
Contact numbering	1 - 10
Number of connections per position	1
Contact material type	turned

Insulation characteristics

Overvoltage category	III
Degree of pollution	3

Dimensions

Dimensional drawing	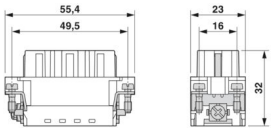
Width	23 mm
Height	33 mm
Length	55.5 mm
Drill hole distance, horizontal	49.5 mm
Drill hole distance, vertical	16 mm

Mechanical characteristics

Contact diameter	2.5 mm

Connection data

Connection technology

Connection technology	Crimp connection
Number of connections per position	1

Connection in acc. with standard	IEC / EN

Conductor connection

Conductor cross section	0.5 mm² ... 4 mm²
Connection cross section AWG	20 ... 12
Tightening torque	0.7 Nm ... 1 Nm (PE connection)
	0.5 Nm ... 0.8 Nm (Mounting screws for mounting in the HEAVYCON housing)
Stripping length of the individual wire	8 mm

Electrical properties

Rated voltage (III/3)	250 V
Rated surge voltage	4 kV
Rated current	16 A

Mechanical properties

Mechanical data

Insertion/withdrawal cycles	≥ 500

Material specifications

Contact material	Copper alloy
Contact surface material	Ag (alternatively Au)
Contact carrier material	PC
Standards/regulations	PC: Fire protection in rail vehicles - requirement sets R22, R23, and R24 acc. to DIN EN 45545-2 (Risk level HL1 - HL3)

Environmental and real-life conditions

Ambient conditions

Ambient temperature (operation)	-40 °C ... 125 °C (including heating up of contacts)

Standards and regulations

Testing

Standards/regulations	PC: Fire protection in rail vehicles - requirement sets R22, R23, and R24 acc. to DIN EN 45545-2 (Risk level HL1 - HL3)

Drawings

Dimensional drawing

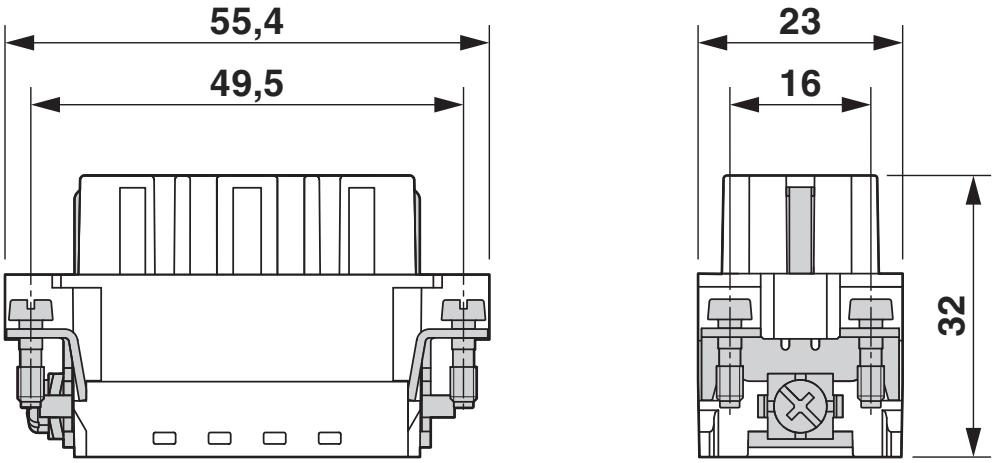

Female insert

Diagram

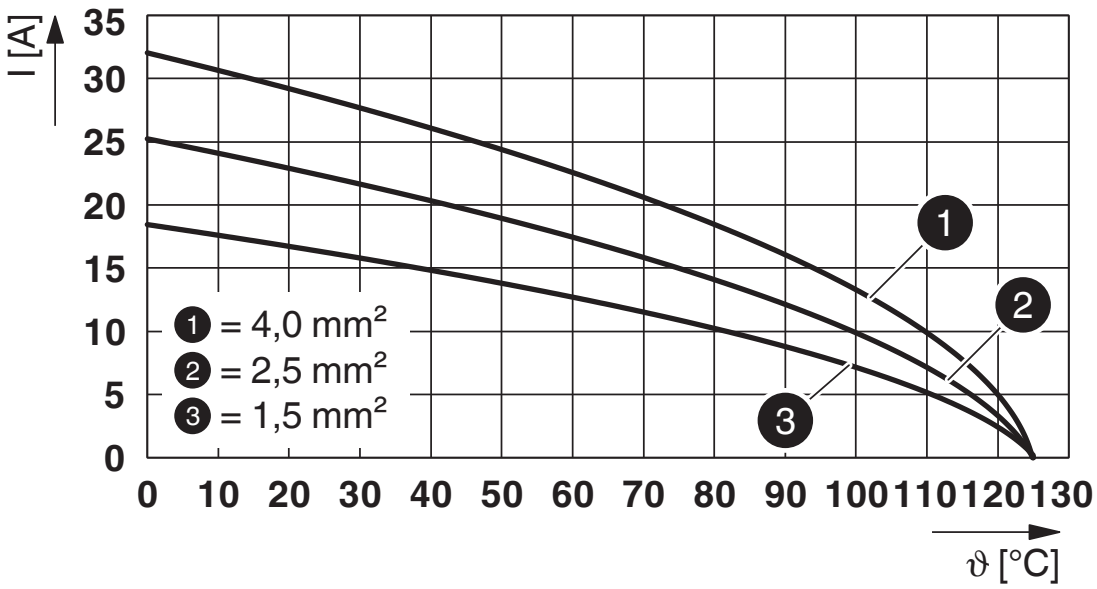

Derating diagram

Dimensional drawing

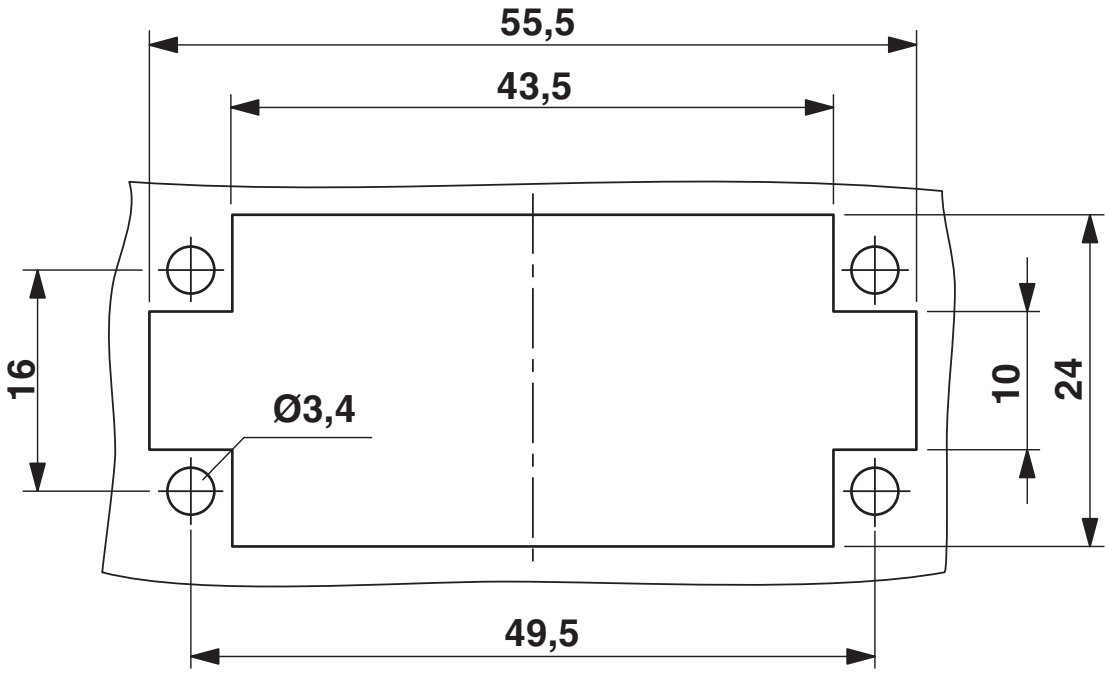

Mounting cutout

Schematic diagram

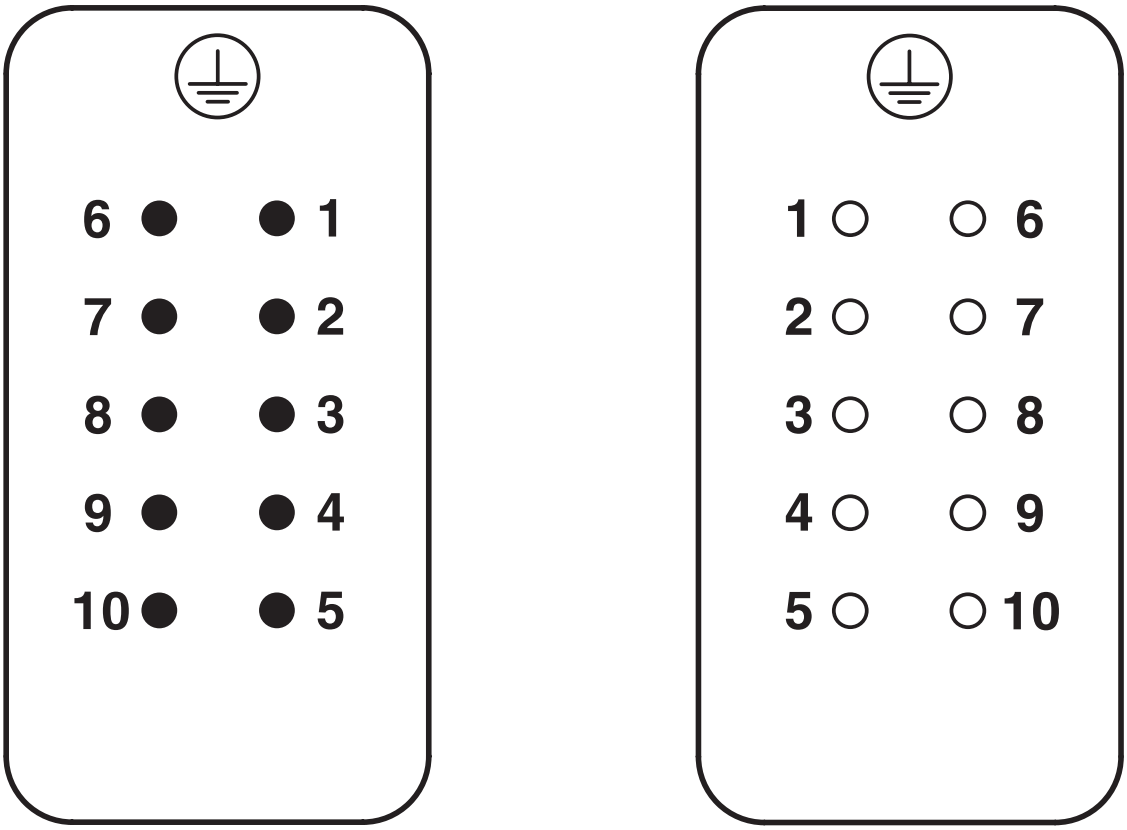

Connector pin assignment, connection side

Approvals

To download certificates, visit the product detail page: https://www.phoenixcontact.com/us/products/1585427

DNV
Approval ID: TAE000037S

CSA
Approval ID: 013631_6233_01

	Nominal voltage U_N	Nominal current I_N	Cross section AWG	Cross section mm^2
	250 V	16 A	- 12	-

EAC
Approval ID: RU C-DE.BL08.B.00511

cULus Recognized
Approval ID: E468743

	Nominal voltage U_N	Nominal current I_N	Cross section AWG	Cross section mm^2
	250 V	16 A	- 12	-

Classifications

ECLASS

ECLASS-11.0	27440205
ECLASS-12.0	27440205
ECLASS-13.0	27440205

ETIM

ETIM 8.0	EC000438

UNSPSC

UNSPSC 21.0	39121500

Environmental product compliance

EU RoHS

Fulfills EU RoHS substance requirements	Yes, No exemptions

China RoHS

Environment friendly use period (EFUP)	EFUP-E
	No hazardous substances above the limits

EU REACH SVHC

REACH candidate substance (CAS No.)	No substance above 0.1 wt%

Accessories

CP-HC-S - Coding profile

1410916

https://www.phoenixcontact.com/us/products/1410916

Coding profile, for contact inserts HC-BB... / HC-A10... / HC-A16...



HC-CP-CK2.5-PL - Coding element

1095419

https://www.phoenixcontact.com/us/products/1095419

Dummy socket for contact carrier with turned CK 2,5-ED... socket contacts. For HC-A../HC-BB.../HC-M... series contact inserts.



HC-CB - Coding bolt

1772722

https://www.phoenixcontact.com/us/products/1772722



Coding pin, prevents mismating of up to six connectors with an identical number of positions

HC-CST - Coding element

1676857

https://www.phoenixcontact.com/us/products/1676857



Coding peg for coding up to 16 connectors

HC-CBU - Coding element

1676860

https://www.phoenixcontact.com/us/products/1676860



Coding socket for coding up to 16 connectors

HC-A-PES - Screw

1584868

https://www.phoenixcontact.com/us/products/1584868



PE screw for contact inserts of A series

CK2,5-ED-0,50BU AG - Crimp contact

1663640

https://www.phoenixcontact.com/us/products/1663640



Crimp contact, contact diameter: 2.5 mm, turned, Socket, contact material: Copper alloy, contact surface: silver-plated, connection cross section: 0.5 mm^2 ... 0.5 mm^2, AWG 20

CK2,5-ED-0,75BU AG - Crimp contact

1663653

https://www.phoenixcontact.com/us/products/1663653



Crimp contact, contact diameter: 2.5 mm, turned, Socket, contact material: Copper alloy, contact surface: silver-plated, connection cross section: 0.75 mm^2 ... 0.75 mm^2, AWG 18

CK2,5-ED-1,00BU AG - Crimp contact

1663666

https://www.phoenixcontact.com/us/products/1663666



Crimp contact, contact diameter: 2.5 mm, turned, Socket, contact material: Copper alloy, contact surface: silver-plated, connection cross section: 0.75 mm^2 ... 1 mm^2, AWG 18

CK2,5-ED-1,50BU AG - Crimp contact

1663679

https://www.phoenixcontact.com/us/products/1663679



Crimp contact, contact diameter: 2.5 mm, turned, Socket, contact material: Copper alloy, contact surface: silver-plated, connection cross section: 1.5 mm^2 ... 1.5 mm^2, AWG 16

CK2,5-ED-2,50BU AG - Crimp contact

1663682

https://www.phoenixcontact.com/us/products/1663682



Crimp contact, contact diameter: 2.5 mm, turned, Socket, contact material: Copper alloy, contact surface: silver-plated, connection cross section: 2.5 mm^2 ... 2.5 mm^2, AWG 14

CK2,5-ED-3,00BU AG - Crimp contact

1663695

https://www.phoenixcontact.com/us/products/1663695



Crimp contact, contact diameter: 2.5 mm, turned, Socket, contact material: Copper alloy, contact surface: silver-plated, connection cross section: 3 mm^2 ... 3 mm^2, AWG 12

CK2,5-ED-4,00BU AG - Crimp contact

1663705

https://www.phoenixcontact.com/us/products/1663705



Crimp contact, contact diameter: 2.5 mm, turned, Socket, contact material: Copper alloy, contact surface: silver-plated, connection cross section: 4 mm^2 ... 4 mm^2, AWG 12

CK2,5-ED-0,50F AG - Crimp contact

1273612

https://www.phoenixcontact.com/us/products/1273612



Crimp contact, contact diameter: 2.5 mm, turned, Socket, contact material: Copper alloy, lead-free, contact surface: silver-plated, connection cross section: 0.5 mm^2 ... 0.5 mm^2, AWG 20

CK2,5-ED-0,75F AG - Crimp contact

1273611

https://www.phoenixcontact.com/us/products/1273611



Crimp contact, contact diameter: 2.5 mm, turned, Socket, contact material: Copper alloy, lead-free, contact surface: silver-plated, connection cross section: 0.75 mm^2 ... 0.75 mm^2, AWG 18

CK2,5-ED-1,00F AG - Crimp contact

1273610

https://www.phoenixcontact.com/us/products/1273610



Crimp contact, contact diameter: 2.5 mm, turned, Socket, contact material: Copper alloy, lead-free, contact surface: silver-plated, connection cross section: 1 mm^2 ... 1 mm^2, AWG 18

CK2,5-ED-1,50F AG - Crimp contact

1273609

https://www.phoenixcontact.com/us/products/1273609



Crimp contact, contact diameter: 2.5 mm, turned, Socket, contact material: Copper alloy, lead-free, contact surface: silver-plated, connection cross section: 1.5 mm^2 ... 1.5 mm^2, AWG 16

CK2,5-ED-2,50F AG - Crimp contact

1273607

https://www.phoenixcontact.com/us/products/1273607



Crimp contact, contact diameter: 2.5 mm, turned, Socket, contact material: Copper alloy, lead-free, contact surface: silver-plated, connection cross section: 2.5 mm^2 ... 2.5 mm^2, AWG 14

CK2,5-ED-3,00F AG - Crimp contact

1273606

https://www.phoenixcontact.com/us/products/1273606



Crimp contact, contact diameter: 2.5 mm, turned, Socket, contact material: Copper alloy, lead-free, contact surface: silver-plated, connection cross section: 3 mm^2 ... 3 mm^2, AWG 12

CK2,5-ED-4,00F AG - Crimp contact

1273604

https://www.phoenixcontact.com/us/products/1273604



Crimp contact, contact diameter: 2.5 mm, turned, Socket, contact material: Copper alloy, lead-free, contact surface: silver-plated, connection cross section: 4 mm^2 ... 4 mm^2, AWG 12

CK2,5-ED-0,37BU AU - Crimp contact

1585647

https://www.phoenixcontact.com/us/products/1585647



Crimp contact, contact diameter: 2.5 mm, turned, Socket, contact material: Copper alloy, contact surface: gold-plated, connection cross section: 0.14 mm^2 ... 0.37 mm^2, AWG 22 ... 26

CK2,5-ED-0,50BU AU - Crimp contact

1674859

https://www.phoenixcontact.com/us/products/1674859



Crimp contact, contact diameter: 2.5 mm, turned, Socket, contact material: Copper alloy, contact surface: gold-plated, connection cross section: 0.5 mm^2 ... 0.5 mm^2, AWG 20

CK2,5-ED-1,00BU AU - Crimp contact

1674833

https://www.phoenixcontact.com/us/products/1674833



Crimp contact, contact diameter: 2.5 mm, turned, Socket, contact material: Copper alloy, contact surface: gold-plated, connection cross section: 0.75 mm^2 ... 1 mm^2, AWG 18

CK2,5-ED-1,50BU AU - Crimp contact

1674820

https://www.phoenixcontact.com/us/products/1674820



Crimp contact, contact diameter: 2.5 mm, turned, Socket, contact material: Copper alloy, contact surface: gold-plated, connection cross section: 1.5 mm^2 ... 1.5 mm^2, AWG 16

CK2,5-ED-2,50BU AU - Crimp contact

1674862

https://www.phoenixcontact.com/us/products/1674862



Crimp contact, contact diameter: 2.5 mm, turned, Socket, contact material: Copper alloy, contact surface: gold-plated, connection cross section: 2.5 mm^2 ... 2.5 mm^2, AWG 14

CK2,5-ED-4,00BU AU - Crimp contact

1674846

https://www.phoenixcontact.com/us/products/1674846



Crimp contact, contact diameter: 2.5 mm, turned, Socket, contact material: Copper alloy, contact surface: gold-plated, connection cross section: 4 mm^2 ... 4 mm^2, AWG 12

CK2,5-ED-0,37F AU - Crimp contact

1273567

https://www.phoenixcontact.com/us/products/1273567



Crimp contact, contact diameter: 2.5 mm, turned, Socket, contact material: Copper alloy, lead-free, contact surface: gold-plated, connection cross section: 0.14 mm^2 ... 0.37 mm^2, AWG 22 ... 26

CK2,5-ED-0,50F AU - Crimp contact

1273564

https://www.phoenixcontact.com/us/products/1273564



Crimp contact, contact diameter: 2.5 mm, turned, Socket, contact material: Copper alloy, lead-free, contact surface: gold-plated, connection cross section: 0.5 mm^2 ... 0.5 mm^2, AWG 20

CK2,5-ED-1,00F AU - Crimp contact

1271379

https://www.phoenixcontact.com/us/products/1271379



Crimp contact, contact diameter: 2.5 mm, turned, Socket, contact material: Copper alloy, lead-free, contact surface: gold-plated, connection cross section: 1 mm^2 ... 1 mm^2, AWG 18

CK2,5-ED-1,50F AU - Crimp contact

1271375

https://www.phoenixcontact.com/us/products/1271375



Crimp contact, contact diameter: 2.5 mm, turned, Socket, contact material: Copper alloy, lead-free, contact surface: gold-plated, connection cross section: 1.5 mm^2 ... 1.5 mm^2, AWG 16

CK2,5-ED-2,50F AU - Crimp contact

1271376

https://www.phoenixcontact.com/us/products/1271376



Crimp contact, contact diameter: 2.5 mm, turned, Socket, contact material: Copper alloy, lead-free, contact surface: gold-plated, connection cross section: 2.5 mm^2 ... 2.5 mm^2, AWG 14

CK2,5-ED-4,00F AU - Crimp contact

1271372

https://www.phoenixcontact.com/us/products/1271372



Crimp contact, contact diameter: 2.5 mm, turned, Socket, contact material: Copper alloy, lead-free, contact surface: gold-plated, connection cross section: 4 mm^2 ... 4 mm^2, AWG 12

HC-A10-I-CT-F - Contact insert

1585427

https://www.phoenixcontact.com/us/products/1585427

HC-A10-I-CT-M - Contact insert

1585414

https://www.phoenixcontact.com/us/products/1585414



Contact insert, number of positions: 10+PE, size: D15, number of connections per position: 1, Pin, Crimp connection, 250 V, 16 A, 0.5 mm^2 ... 4 mm^2

HC-A-PE-PT - Adapter

1054712

https://www.phoenixcontact.com/us/products/1054712



PE adapter with PT connection, for 1 PE connection, for HC-A10 / HC-A16 / HC-D15 / HC-D25 series contact inserts

UNIFOX MT-CK 1.6/2.5 - Assembly tool

1089092

https://www.phoenixcontact.com/us/products/1089092



Assembly tool, for CK 1.6... crimp contacts for small conductor cross sections

UNIFOX RT-CK 2.5 - Contact removal tool

1072067

https://www.phoenixcontact.com/us/products/1072067



Contact removal tool, for turned CK 2,5... contacts

Phoenix Contact 2024 © - all rights reserved
https://www.phoenixcontact.com

Phoenix Contact USA
586 Fulling Mill Road
Middletown, PA 17057, United States
(+717) 944-1300
info@phoenixcon.com