CUDEVICES



# **MODEL:** PJ-018H-SMT-TR | **DESCRIPTION:** DC POWER JACK

### FEATURES

- 1.65 mm center pin
- 5.0 A rating
- right angle orientation
- surface mount (SMT)



RoHS

## SPECIFICATIONS

| parameter | conditions/description | min | typ | max | units |
|---|---|---|---|---|---|
| rated input voltage | | | 24 | | Vdc |
| rated input current | | | | 5.0 | A |
| contact resistance | | | | 30 | mΩ |
| insulation resistance | at 500 Vdc | 100 | | | MΩ |
| voltage withstand | for 1 minute | | | 500 | Vac |
| insertion/withdrawal force | | 0.3 | | 3 | kg |
| operating temperature | | -25 | | 85 | °C |
| storage temperature | | -40 | | 85 | °C |
| life | | | 5,000 | | cycles |
| flammability rating | UL94V-0 | | | | |
| RoHS | yes | | | | |

## SOLDERABILITY

| parameter | conditions/description | min | typ | max | units |
|---|---|---|---|---|---|
| reel storage | reel opened & unsused parts repacked within 2 hours: ≤30°C, ≤60% humidity<br>reel unopened, 1 year shelf life: ≤30°C, ≤85% humidity | | | | |
| reflow soldering | see reflow profile | | | 260 | °C |
| drying conditions | parts removed from reel over 6 hours: bake at 40°C for 6 hours | | | | |

Note: 1. CUI Devices recommends usage of the product within 2 hours after T&R is opened. After 6 hours, CUI Devices recommends drying the parts prior to use.

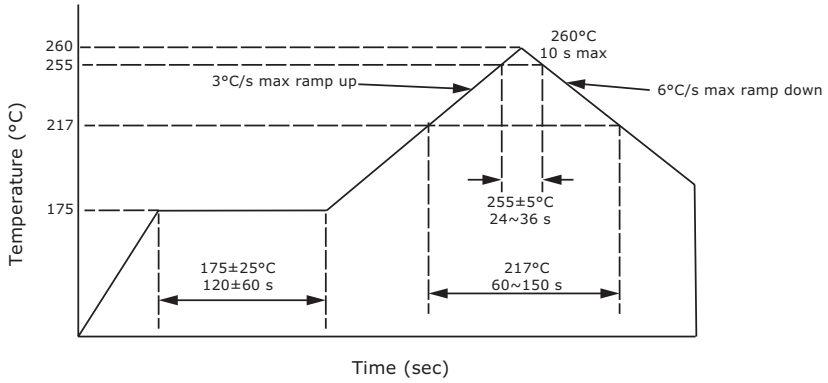

## MECHANICAL DRAWING

units: mm
tolerance:
X.X ±0.30 mm
X.XX ±0.20 mm
X.XXX ±0.10 mm
PCB: ±0.05 mm
unless otherwise specified

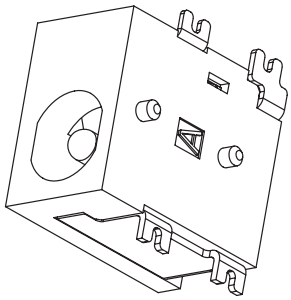

| DESCRIPTION | MATERIAL | PLATING/COLOR |
|---|---|---|
| center pin | H62 | silver |
| terminal 1 | brass t=0.30 | silver |
| terminal 2 | C5210R-EH t=0.20 | silver |
| terminal 3 | brass t=0.25 | silver |
| housing | PA9T (UL94V-0) | black |

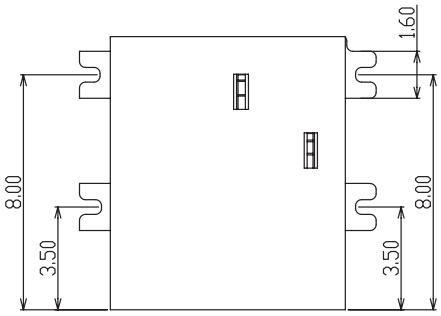


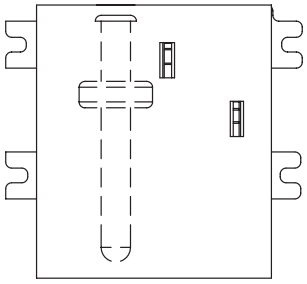

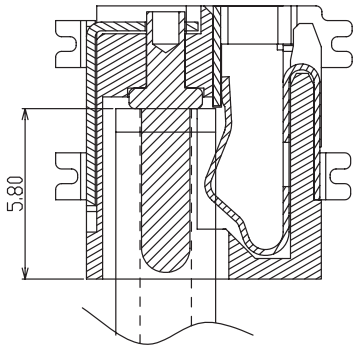


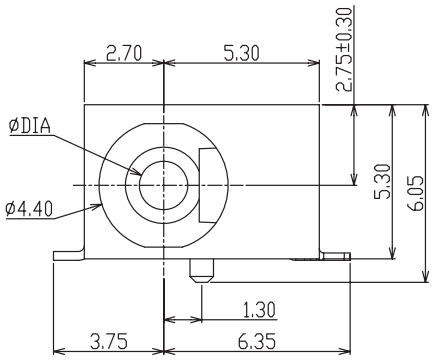


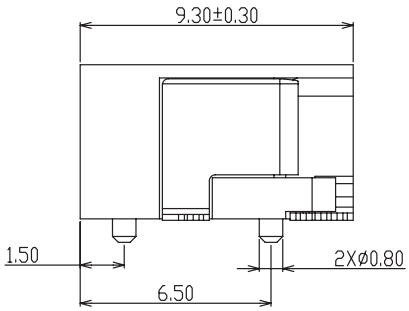


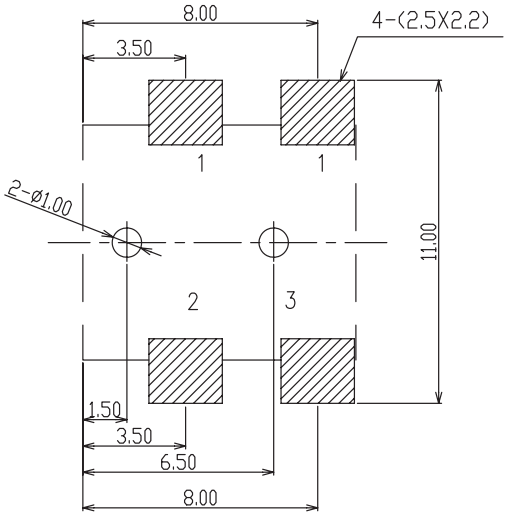


Recommended PCB Layout
Top View

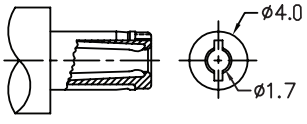


MATING PLUG
Jack Insertion Depth: 5.8 mm

| | |
|---|---|
| SCHEMATIC | 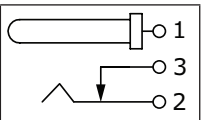 |
| Model | PJ-018H-SMT-TR |
| Center Pin | Ø1.65 mm |

## PACKAGING

units: mm

Reel Size: Ø330 mm
Reel QTY: 600 pcs per reel

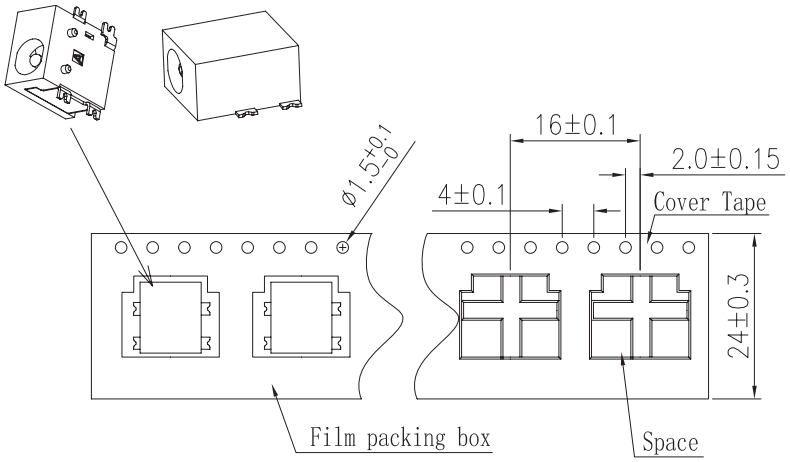


1 Film packing box=1×600pcs
=600pcs

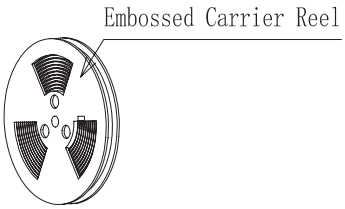

## REVISION HISTORY

| rev. | description | date |
|---|---|---|
| 1.0 | initial release | 02/05/2007 |
| 1.01 | added TR package option and jack insertion depth | 11/07/2012 |
| 1.02 | applied new spec template | 08/21/2013 |
| 1.03 | increased voltage rating | 04/14/2016 |
| 1.04 | added storage and drying conditions, and tape and reel packaging details | 10/11/2017 |
| 1.05 | brand update | 10/25/2019 |
| 1.06 | logo, datasheet style update | 08/05/2022 |
| 1.07 | product reengineered for improved manufacturability and production yield, see PCN for details | 03/03/2023 |

The revision history provided is for informational purposes only and is believed to be accurate.

CUI Devices offers a one (1) year limited warranty. Complete warranty information is listed on our website.

CUI Devices reserves the right to make changes to the product at any time without notice. Information provided by CUI Devices is believed to be accurate and reliable. However, no responsibility is assumed by CUI Devices for its use, nor for any infringements of patents or other rights of third parties which may result from its use.

CUI Devices products are not authorized or warranted for use as critical components in equipment that requires an extremely high level of reliability. A critical component is any component of a life support device or system whose failure to perform can be reasonably expected to cause the failure of the life support device or system, or to affect its safety or effectiveness.

**cuidevices.com**