High Power Infrared Emitting Diode, 850 nm, Surface Emitter Technology

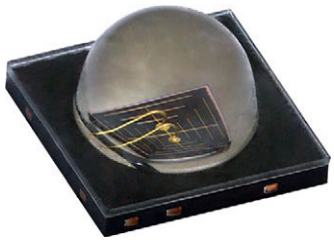

FEATURES

- Package type: surface mount
- Double stack technology
- Package form: power QFN
- Dimensions (L x W x H in mm): 3.85 x 3.85 x 2.24
- Peak wavelength: λ_p = 850 nm
- Zener diode for ESD protection up to 2 kV
- High radiant power
- High radiant intensity
- Angle of half intensity: φ = ± 45°
- Designed for high drive currents: up to 1 A (DC) and up to 5 A pulses
- Low thermal resistance: R_{thJP} = 9 K/W
- Floor life: 168 h, MSL 3, according to J-STD-020
- Lead (Pb)-free reflow soldering
- Material categorization: for definitions of compliance please see www.vishay.com/doc?99912

Pb-free

e3

RoHS COMPLIANT

HALOGEN FREE

GREEN (5-2008)

DESCRIPTION

As part of the SurfLight™ portfolio, the VSMY98545ADS is an infrared, 850 nm emitting diode based on surface emitter technology with high radiant power and high speed, molded in low thermal resistance SMD package with lens. A 42 mil chip provides outstanding radiant intensity and allows DC operation of the device up to 1 A. Superior ESD characteristics are ensured by an integrated Zener diode.

APPLICATIONS

- Infrared illumination for CMOS cameras (CCTV)
- Illumination for cameras (3D gaming)
- Machine vision

PRODUCT SUMMARY

COMPONENT	I_e (mW/sr)	φ (deg)	λ_p (nm)	t_r (ns)
VSMY98545ADS	630	± 45	850	14

Note

- Test conditions see table “Basic Characteristics”

ORDERING INFORMATION

ORDERING CODE	PACKAGING	REMARKS	PACKAGE FORM
VSMY98545ADS	Tape and reel	MOQ: 600 pcs, 600 pcs/reel	High power with lens

Note

- MOQ: minimum order quantity

ABSOLUTE MAXIMUM RATINGS (T_{amb} = 25 °C, unless otherwise specified)

PARAMETER	TEST CONDITION	SYMBOL	VALUE	UNIT
Reverse voltage		V_R	5	V
Forward current		I_F	1	A
Peak forward current	t_p/T = 0.5, t_p = 100 µs	I_{FM}	2	A
Surge forward current	t_p = 100 µs	I_{FSM}	5	A
Power dissipation		P_V	3.5	W
Junction temperature		T_j	115	°C
Operating temperature range		T_{amb}	-40 to +85	°C
Storage temperature range		T_{stg}	-55 to +100	°C
Soldering temperature	According to Fig. 7, J-STD-20	T_{sd}	260	°C
Thermal resistance junction / pin	JESD 51	R_{thJP}	9	K/W

For technical questions, contact: emittertechsupport@vishay.com

THIS DOCUMENT IS SUBJECT TO CHANGE WITHOUT NOTICE. THE PRODUCTS DESCRIBED HEREIN AND THIS DOCUMENT ARE SUBJECT TO SPECIFIC DISCLAIMERS, SET FORTH AT www.vishay.com/doc?91000

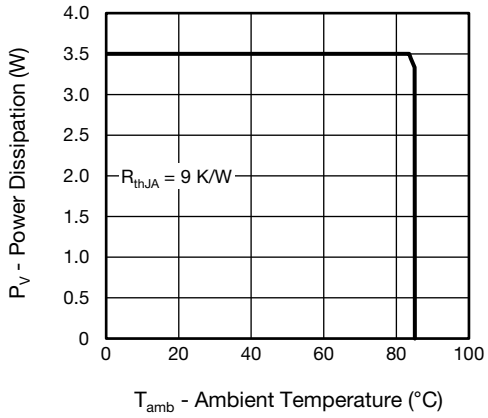

Fig. 1 - Power Dissipation Limit vs. Ambient Temperature

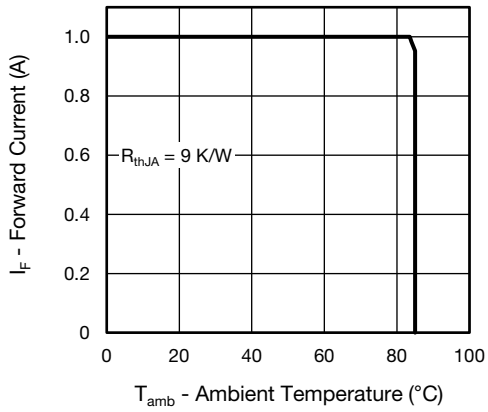

Fig. 2 - Forward Current Limit vs. Ambient Temperature

BASIC CHARACTERISTICS (T_{amb} = 25 °C, unless otherwise specified)						
PARAMETER	**TEST CONDITION**	**SYMBOL**	**MIN.**	**TYP.**	**MAX.**	**UNIT**
Forward voltage	I_F = 1 A, t_p = 20 ms	V_F	-	3.1	3.5	V
Temperature coefficient of V_F	I_F = 1 A		-	-3	-	mV/K
Reverse current	V_R = 5 V	I_R	-	-	10	µA
Junction capacitance	V_R = 0 V, f = 1 MHz, E = 0 mW/cm²	C_J	-	130	-	pF
Radiant intensity	I_F = 1 A, t_p = 20 ms	I_e	400	630	-	mW/sr
Radiant power	I_F = 1 A, t_p = 20 ms	ϕ_e	-	1340	-	mW
Temperature coefficient of ϕ	I_F = 1 A, t_p = 20 ms	TK_ϕ	-	-0.3	-	%/K
Angle of half intensity		φ	-	± 45	-	deg
Peak wavelength	I_F = 1 A	λ_p	830	850	870	nm
Spectral bandwidth	I_F = 1 A	$\Delta\lambda$	-	35	-	nm
Temperature coefficient of λ_p	I_F = 1 A, t_p = 20 ms	$TK_{\lambda p}$	-	0.3	-	nm/K
Rise time	I_F = 1 A	t_r	-	14	-	ns
Fall time	I_F = 1 A	t_f	-	17	-	ns

BASIC CHARACTERISTICS (T_{amb} = 25 °C, unless otherwise specified)

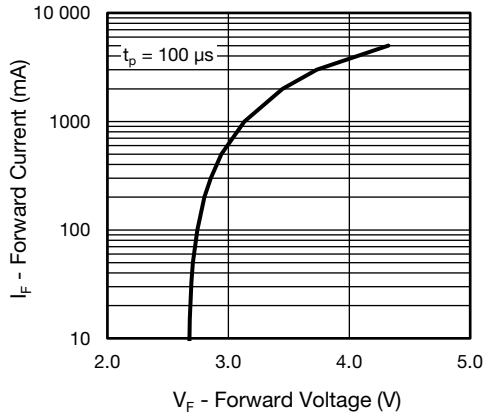

Fig. 3 - Forward Current vs. Forward Voltage

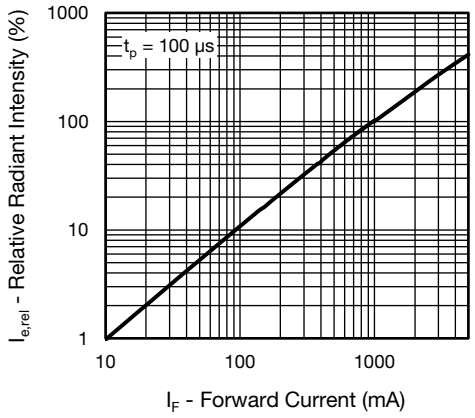

Fig. 4 - Relative Radiant Intensity vs. Forward Current

For technical questions, contact: emittertechsupport@vishay.com
THIS DOCUMENT IS SUBJECT TO CHANGE WITHOUT NOTICE. THE PRODUCTS DESCRIBED HEREIN AND THIS DOCUMENT ARE SUBJECT TO SPECIFIC DISCLAIMERS, SET FORTH AT www.vishay.com/doc?91000

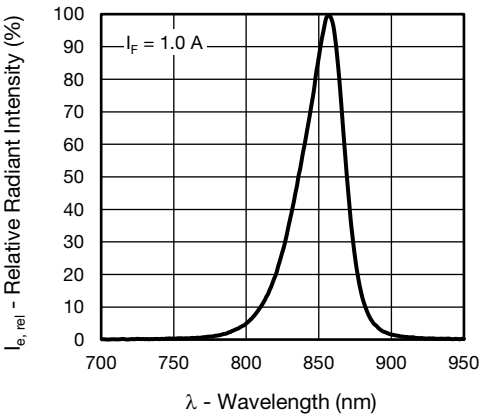

Fig. 5 - Relative Radiant Intensity vs. Wavelength

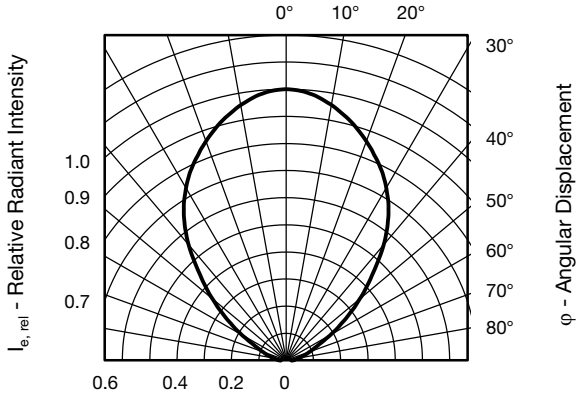

Fig. 6 - Relative Radiant Intensity vs. Angular Displacement

TAPING DIMENSIONS in millimeters

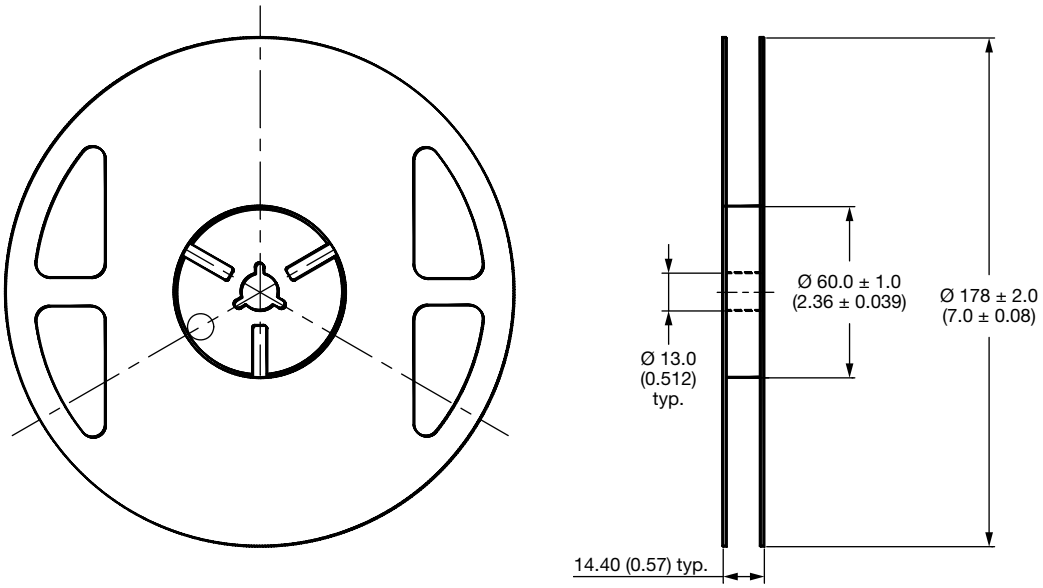

Notes

- Empty component pockets sealed with top cover tape.
- 7 inch reel - 600 pieces per reel.
- The maximum number of consecutive missing lamps is two.
- In accordance with ANSI/EIA 481-1-A-1994 specifications.

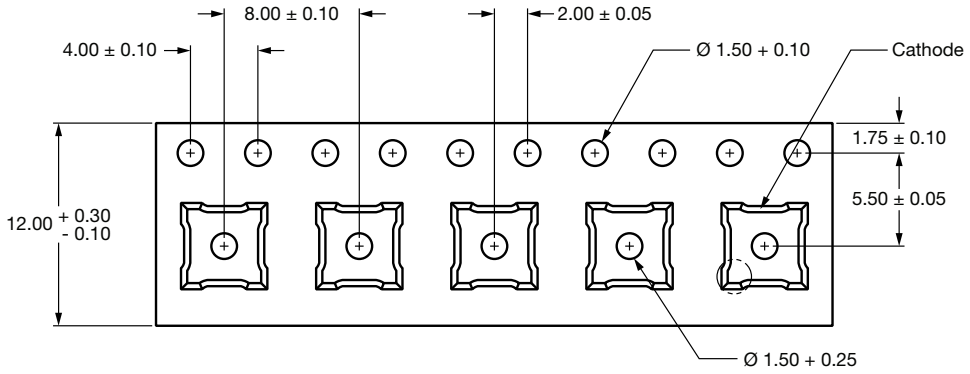

For technical questions, contact: emittertechsupport@vishay.com
THIS DOCUMENT IS SUBJECT TO CHANGE WITHOUT NOTICE. THE PRODUCTS DESCRIBED HEREIN AND THIS DOCUMENT ARE SUBJECT TO SPECIFIC DISCLAIMERS, SET FORTH AT www.vishay.com/doc?91000

PACKAGE DIMENSIONS in millimeters

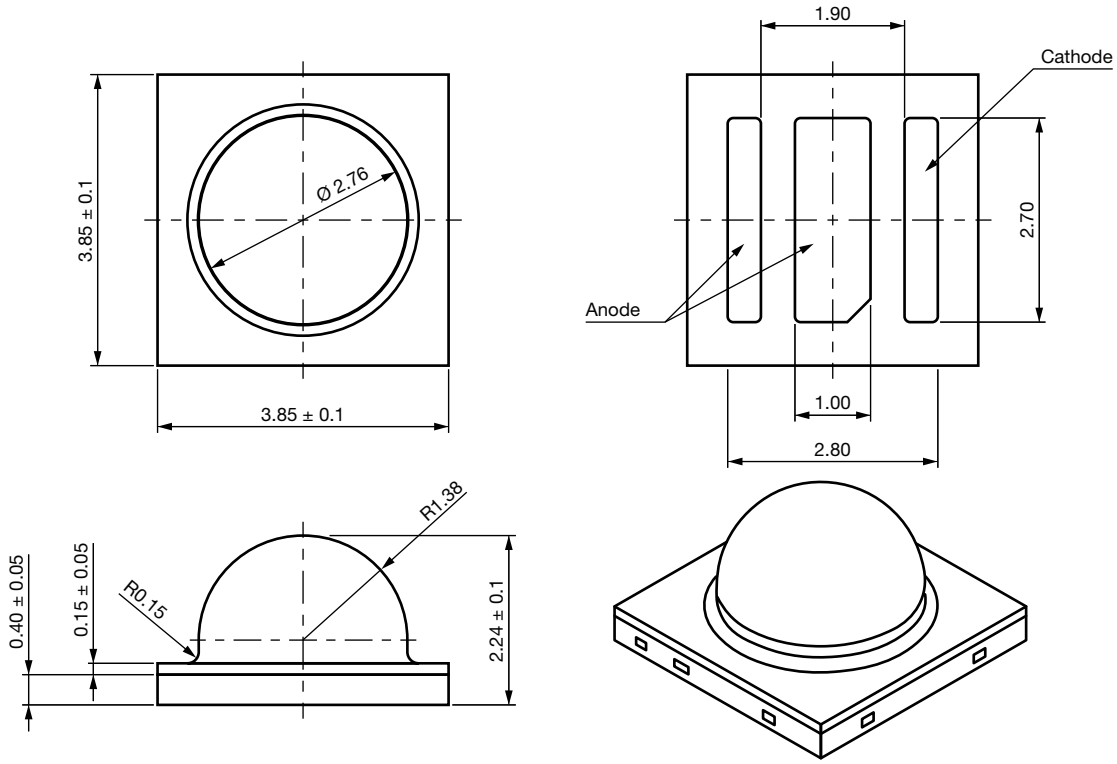

Notes

- Tolerance is ± 0.10 mm (0.004") unless otherwise noted.
- Specifications are subject to change without notice.

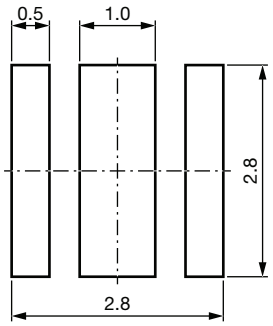

For technical questions, contact: emittertechsupport@vishay.com
THIS DOCUMENT IS SUBJECT TO CHANGE WITHOUT NOTICE. THE PRODUCTS DESCRIBED HEREIN AND THIS DOCUMENT ARE SUBJECT TO SPECIFIC DISCLAIMERS, SET FORTH AT www.vishay.com/doc?91000

SOLDER PROFILE

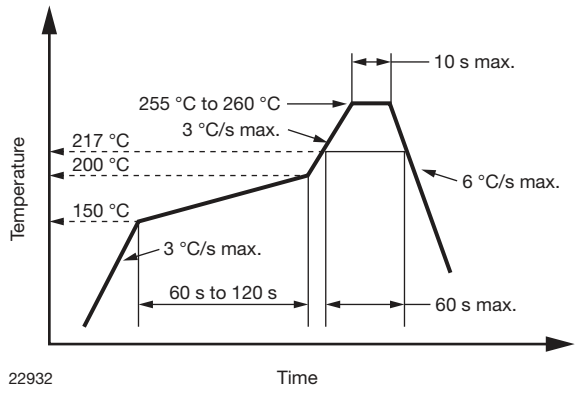

Fig. 7 - Lead (Pb)-free Reflow Solder Profile
According to J-STD-020

DRYPACK

Devices are packed in moisture barrier bags (MBB) to prevent the products from moisture absorption during transportation and storage. Each bag contains a desiccant.

FLOOR LIFE

Floor life (time between soldering and removing from MBB) must not exceed the time indicated on MBB label:

Floor life: 168 h

Conditions: T_{amb} < 30 °C, RH < 60 %

Moisture sensitivity level 3, according to J-STD-020B

DRYING

In case of moisture absorption devices should be baked before soldering. Conditions see J-STD-020 or label. Devices taped on reel dry using recommended conditions 192 h at 40 °C (+ 5 °C), RH < 5 %.

For technical questions, contact: emittertechsupport@vishay.com
THIS DOCUMENT IS SUBJECT TO CHANGE WITHOUT NOTICE. THE PRODUCTS DESCRIBED HEREIN AND THIS DOCUMENT ARE SUBJECT TO SPECIFIC DISCLAIMERS, SET FORTH AT www.vishay.com/doc?91000

Disclaimer

ALL PRODUCT, PRODUCT SPECIFICATIONS AND DATA ARE SUBJECT TO CHANGE WITHOUT NOTICE TO IMPROVE RELIABILITY, FUNCTION OR DESIGN OR OTHERWISE.

Vishay Intertechnology, Inc., its affiliates, agents, and employees, and all persons acting on its or their behalf (collectively, “Vishay”), disclaim any and all liability for any errors, inaccuracies or incompleteness contained in any datasheet or in any other disclosure relating to any product.

Vishay makes no warranty, representation or guarantee regarding the suitability of the products for any particular purpose or the continuing production of any product. To the maximum extent permitted by applicable law, Vishay disclaims (i) any and all liability arising out of the application or use of any product, (ii) any and all liability, including without limitation special, consequential or incidental damages, and (iii) any and all implied warranties, including warranties of fitness for particular purpose, non-infringement and merchantability.

Statements regarding the suitability of products for certain types of applications are based on Vishay's knowledge of typical requirements that are often placed on Vishay products in generic applications. Such statements are not binding statements about the suitability of products for a particular application. It is the customer's responsibility to validate that a particular product with the properties described in the product specification is suitable for use in a particular application. Parameters provided in datasheets and / or specifications may vary in different applications and performance may vary over time. All operating parameters, including typical parameters, must be validated for each customer application by the customer's technical experts. Product specifications do not expand or otherwise modify Vishay's terms and conditions of purchase, including but not limited to the warranty expressed therein.

Hyperlinks included in this datasheet may direct users to third-party websites. These links are provided as a convenience and for informational purposes only. Inclusion of these hyperlinks does not constitute an endorsement or an approval by Vishay of any of the products, services or opinions of the corporation, organization or individual associated with the third-party website. Vishay disclaims any and all liability and bears no responsibility for the accuracy, legality or content of the third-party website or for that of subsequent links.

Except as expressly indicated in writing, Vishay products are not designed for use in medical, life-saving, or life-sustaining applications or for any other application in which the failure of the Vishay product could result in personal injury or death. Customers using or selling Vishay products not expressly indicated for use in such applications do so at their own risk. Please contact authorized Vishay personnel to obtain written terms and conditions regarding products designed for such applications.

No license, express or implied, by estoppel or otherwise, to any intellectual property rights is granted by this document or by any conduct of Vishay. Product names and markings noted herein may be trademarks of their respective owners.

© 2024 VISHAY INTERTECHNOLOGY, INC. ALL RIGHTS RESERVED