PLC-RPT- 24UC/21-21/RW - Relay module

2900346

https://www.phoenixcontact.com/us/products/2900346

Please be informed that the data shown in this PDF document is generated from our online catalog. Please find the complete data in the user documentation. Our general terms of use for downloads are valid.



PLC-INTERFACE for railway applications, consisting of basic terminal block with Push-in connection and plug-in miniature relay with power contact, range: 0.7 x U_N to 1.25 x U_N, temperature class TX: -40°C to +70°C, 2 changeover contacts, input voltage 24 V DC

Your advantages

- Optimum relay operation thanks to wide-range electronics
- Certified in accordance with EN 50155
- Safe isolation between coil and contact side
- Vibration and shock resistance in accordance with EN 50155
- Temperature range: -40 °C ... + 70 °C (short-term 85 °C)
- Input voltage range of 0.7 to 1.25 x UN (1.4 x UN briefly)

Commercial data

Item number	2900346
Packing unit	10 pc
Minimum order quantity	10 pc
Sales key	C461
Product key	DK62BL
GTIN	4046356507509
Weight per piece (including packing)	62.82 g
Weight per piece (excluding packing)	64.11 g
Customs tariff number	85364190
Country of origin	DE

Technical data

Product properties

Product type	Relay Module
Product family	PLC-INTERFACE
Application	Railway applications
Installation location	Attached to the vehicle body
Operating mode	100% operating factor
Mechanical service life	approx. 3x 10^7 cycles

Insulation characteristics

Insulation	Basic insulation
Overvoltage category	III
Pollution degree	2

Data management status

Date of last data management	03.07.2025

Electrical properties

Maximum power dissipation for nominal condition	0.48 W
Test voltage (Winding/contact)	5 kV_{rms} (50 Hz, 1 min., winding/contact)
Test voltage (Changeover contact/changeover contact)	2.5 kV_{rms} (50 Hz, 1 min., changeover contact/changeover contact)
Rated insulation voltage	250 V AC
Rated surge voltage	6 kV

Input data

Coil side

Nominal input voltage U_N	24 V DC
Input voltage range	16.8 V DC ... 30 V DC
Input voltage range in reference to U_N	0.7 ... 1.25
Nominal voltage (plugged-in electromechanical relay)	12 V DC
Drive and function	monostable
Drive (polarity)	polarized
Typical input current at U_N	20 mA
Typical response time	5 ms
Typical release time	11 ms
Protective circuit	Bridge rectifier
	Surge protection; Freewheeling diode
	RCZ filter
	Wide-range electronics
Operating voltage display	Yellow LED

Output data

Switching

Contact switching type	2 changeover contacts
Type of switch contact	Single contact
Contact material	AgNi
Maximum switching voltage	250 V AC/DC (Separating plate PLC-ATP must be installed for voltages larger than 250 V (L1, L2, L3) between identical terminal blocks in adjacent modules.)
Minimum switching voltage	5 V (10 mA)
Limiting continuous current	6 A
Maximum inrush current	15 A (300 ms)
Min. switching current	10 mA (5 V)
Interrupting rating (ohmic load) max.	140 W (at 24 V DC)
	85 W (at 48 V DC)
	60 W (at 60 V DC)
	44 W (at 110 V DC)
	60 W (at 220 V DC)
	1500 VA (for 250 V AC)
Switching capacity	2 A (at 24 V, DC13)
	0.2 A (at 250 V, DC13)
	3 A (at 24 V, AC15)
	3 A (at 120 V, AC15)
	3 A (at 250 V, AC15)

Connection data

Connection method	Push-in connection
Stripping length	10 mm
Conductor cross-section rigid	0.14 mm² ... 2.5 mm²
Conductor cross-section flexible	0.14 mm² ... 2.5 mm²
	0.2 mm² ... 2.5 mm² (Single ferrule)
	2x 0.5 mm² ... 1 mm² (TWIN ferrule)
Conductor cross-section AWG	26 ... 14

Dimensions

Width	14 mm
Height	80 mm
Depth	94 mm

Material specifications

Color	gray (RAL 7042)
Flammability rating according to UL 94 (Housing)	V0 (Housing)

Environmental and real-life conditions

Ambient conditions

Degree of protection (Relay)	RT III (Relay)

Degree of protection (Relay base)	IP20 (Relay base)
Ambient temperature (operation)	-40 °C ... 70 °C (Temperature class TX)
Ambient temperature (storage/transport)	-40 °C ... 85 °C

Approvals

CE

Certificate	CE-compliant

UKCA

Certificate	UKCA-compliant

Shipbuilding approval

Certificate	TAE0000196

Corrosive gas test

Identification	ISA-S71.04. G3 Harsh Group
	EN 60068-2-60

Shipbuilding data

Temperature	D
Humidity	A
Vibration	B/C
EMC	B
Enclosure	Required protection according to the Rules shall be provided upon installation on board

EMC data

Electromagnetic compatibility	Conformance with EMC directive
Low Voltage Directive	Conformance with Low Voltage Directive

Standards and regulations

Standards/regulations	IEC 60947-5-1
	EN 50155 (VDE 0115 part 200)
	EN 61373
	EN 50121

Mounting

Mounting type	DIN rail mounting
Assembly note	in rows with zero spacing
Mounting position	any

Drawings

Diagram

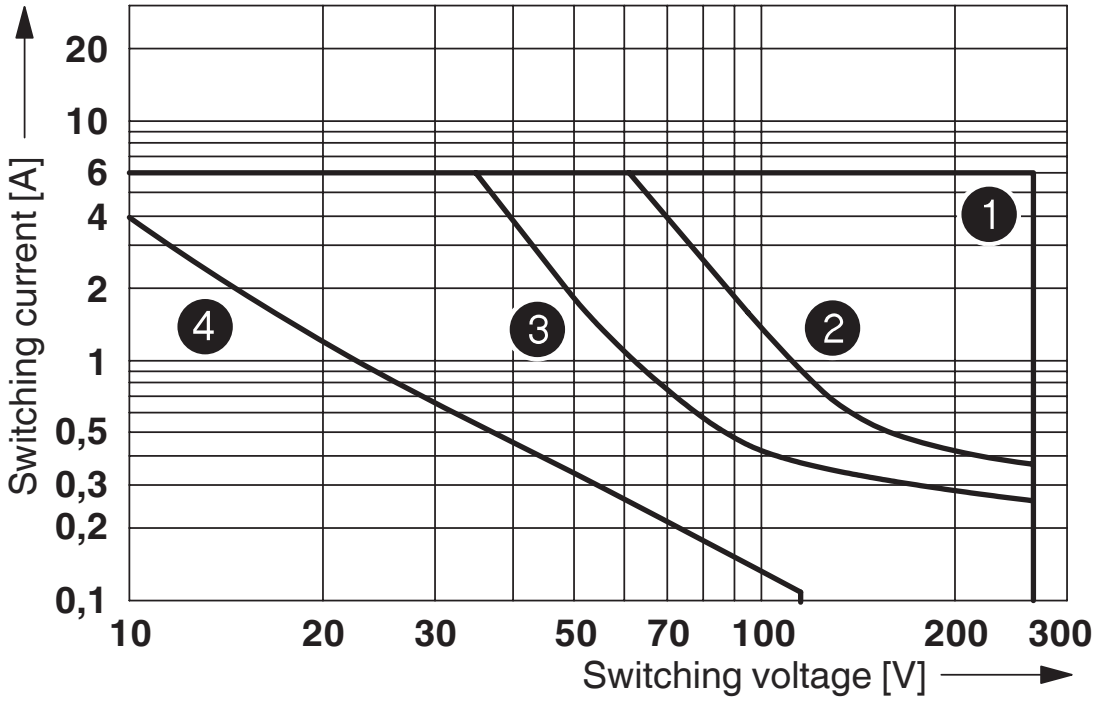

1 AC, ohmic load
2 DC, ohmic load, contacts in series
3 DC, ohmic load
4 DC, L/R = 40 ms

Interrupting rating

Diagram

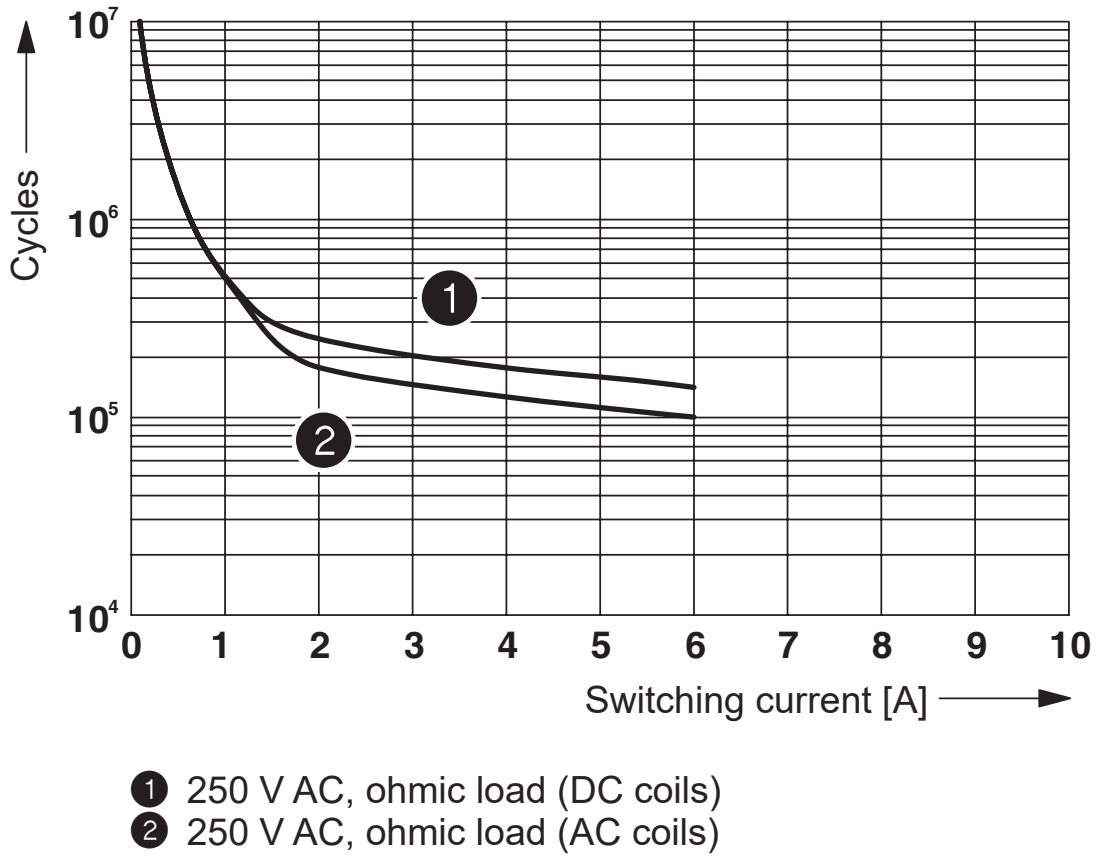

1 250 V AC, ohmic load (DC coils)
2 250 V AC, ohmic load (AC coils)

Electrical service life

Diagram

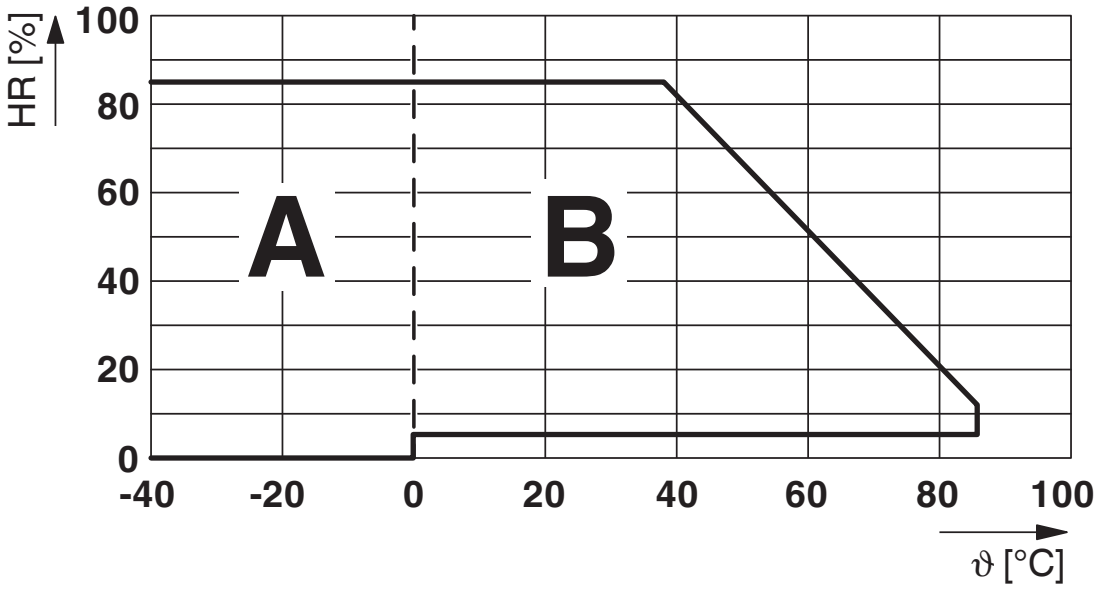

Permissible humidity for operation and storage.
The maximum permissible ambient temperature as specified in the data sheet must be observed.

Area A: Ice buildup at ambient temperatures ≤ 0°C must be prevented
Area B: Condensation at ambient temperatures > 0°C must be prevented

On 30 full days that are naturally distributed across an entire year, a humidity level of 95% is permissible at an ambient temperature ≤ 25°C.

Circuit diagram

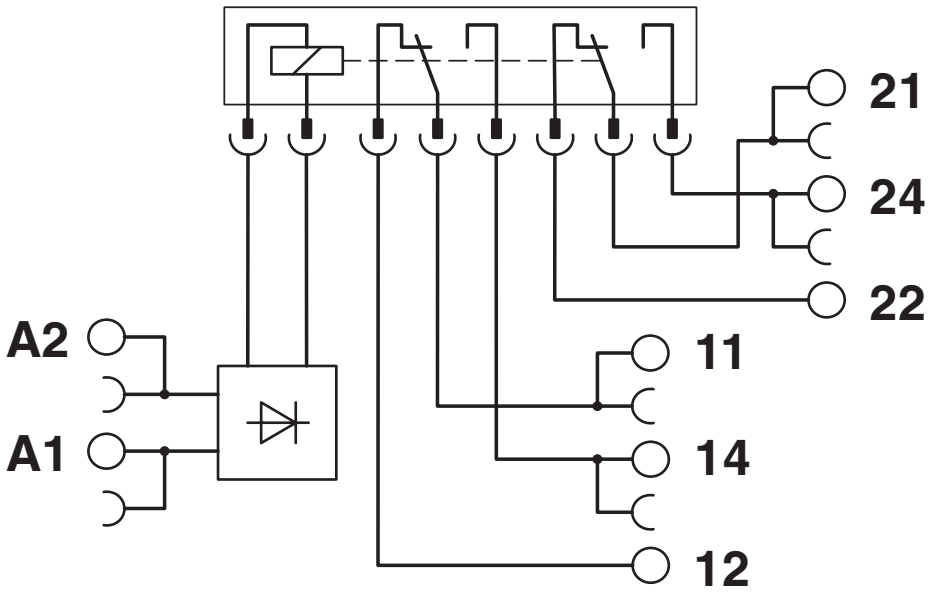

Approvals

To download certificates, visit the product detail page: https://www.phoenixcontact.com/us/products/2900346

DNV GL
Approval ID: TAE0000196

cULus Listed
Approval ID: E140324

cUL Recognized
Approval ID: E238705

UL Recognized
Approval ID: E238705

UL Listed
Approval ID: FILE E 172140

cUL Listed
Approval ID: FILE E 172140

Classifications

ECLASS

ECLASS-13.0	27371601
ECLASS-15.0	27371601

ETIM

ETIM 9.0	EC001437

UNSPSC

UNSPSC 21.0	39122300

Environmental product compliance

EU RoHS

Fulfills EU RoHS substance requirements	Yes
Exemption	7(a), 7(c)-I

China RoHS

Environment friendly use period (EFUP)	EFUP-50
	An article-related China RoHS declaration table can be found in the download area for the respective article under "Manufacturer declaration". For all articles with EFUP-E, no China RoHS declaration table issued and required.

EU REACH SVHC

REACH candidate substance (CAS No.)	Lead(CAS: 7439-92-1)
SCIP	2f8caf65-c4c0-4d57-a772-762571601136

EF3.0 Climate Change

CO2e kg	0.726 kg CO2e

Phoenix Contact 2025 © - all rights reserved
https://www.phoenixcontact.com

Phoenix Contact USA
586 Fulling Mill Road
Middletown, PA 17057, United States
(+717) 944-1300
info@phoenixcon.com