PLT-SEC-T3-230-P-UT/PT - Type 3 surge protection plug

2907923

https://www.phoenixcontact.com/us/products/2907923

Please be informed that the data shown in this PDF document is generated from our online catalog. Please find the complete data in the user documentation. Our general terms of use for downloads are valid.



Replacement plug for type 2/3 surge protection from the PLT-SEC-…-UT/PT product series. Nominal voltage 230 V.

Commercial data

Item number	2907923
Packing unit	10 pc
Minimum order quantity	10 pc
Sales key	CL19
Product key	CL14A4
Catalog page	Page 83 (C-4-2019)
GTIN	4055626257600
Weight per piece (including packing)	38.777 g
Weight per piece (excluding packing)	33.16 g
Customs tariff number	85363030
Country of origin	DE

PLT-SEC-T3-230-P-UT/PT - Type 3 surge protection plug

2907923

https://www.phoenixcontact.com/us/products/2907923

Technical data

Product properties

Product type	Replacement plug
Product family	SEC Family
IEC power supply system	TN-S
	TT
Type	Male
Number of positions	2
Surge protection fault message	optical

Insulation characteristics

Overvoltage category	III
Pollution degree	2
IEC test classification	II / III
	T2 / T3
EN type	T2 / T3
Number of ports	One

Connection data

Connection method	pluggable

Dimensions

Dimensional drawing	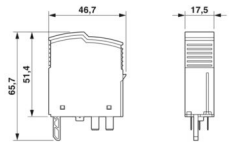
Width	17.5 mm
Height	46.7 mm
Depth	65.7 mm
Horizontal pitch	1 Div.

Material specifications

Color	light grey (RAL 7035)
	gray (RAL 7042)
Flammability rating according to UL 94	V-0
CTI value of material	600
Insulating material	PA 6.6-FR 20 % GF
	PA 6.6-FR
Housing material	PA 6.6-FR 20 % GF
	PA 6.6-FR

Protective circuit

Mode of protection	L-N
	L-PE
	N-PE
Direction of action	1L-N & N-PE
Nominal voltage U_N	240 V AC (TN-S)
	240 V AC (TT)
Nominal frequency f_N	50 Hz (60 Hz)
Maximum continuous voltage U_C	264 V AC
Residual current I_{PE}	≤ 5 µA
Standby power consumption P_C	≤ 26.40 mVA (at U_{REF})
	≤ 26.40 mVA (at U_C)
Reference test voltage U_{REF}	264.00 V AC
Nominal discharge current I_n (8/20) µs	5 kA
Maximum discharge current I_{max} (8/20) µs	10 kA
Combination wave U_{OC}	6 kV
Voltage protection level U_p (L-N)	≤ 1.25 kV (at U_{OC})
	≤ 1.4 kV (at I_n)
Voltage protection level U_p (L-PE)	≤ 1.4 kV
Voltage protection level U_p (N-PE)	≤ 1.4 kV
TOV behavior at U_T (L-N)	400 V AC (5 s / withstand mode)
	457 V AC (120 min / safe failure mode)
TOV behavior at U_T (L-PE)	457 V AC (5 s / withstand mode)
	457 V AC (120 min / withstand mode)
	1464 V AC (200 ms / safe failure mode)
TOV behavior at U_T (N-PE)	1200 V AC (200 ms / safe failure mode)
Response time t_A (L-N)	≤ 25 ns
Response time t_A (L-PE)	≤ 100 ns
Response time t_A (N-PE)	≤ 100 ns
Short-circuit current rating I_{SCCR}	10 kA AC
Max. backup fuse with branch wiring	32 A (gG / B / C)

Additional technical data

Short-circuit current rating I_{SCCR}	0.25 kA DC (Without additional backup fuse in the DC branch wiring)
	5 kA DC (for 20 A gG / B backup fuse)
Residual voltage U_{res} (L-N)	≤ 1.15 kV (at 2 kA)
	≤ 1.25 kV (at 3 kA)
	≤ 1.1 kV (at U_{OC} = 4 kV)
Residual voltage U_{res} (L-PE)	≤ 1.1 kV (at 2 kA)
	≤ 1.1 kV (at 3 kA)
	≤ 1.2 kV (at U_{OC} = 4 kV)
Residual voltage U_{res} (N-PE)	≤ 1.1 kV (at 2 kA)
	≤ 1.1 kV (at 3 kA)
	≤ 1.2 kV (at U_{OC} = 4 kV)

Maximum continuous voltage U_C	275 V AC
	240 V DC
Mode of protection	(DC+) - (DC-)
	(DC+/DC-) - PE
IEC test classification (in accordance with IEC 61643-21)	D1
Impulse durability (wire-wire)	D1 - 500 A
Impulse durability (line-earth)	D1 - 500 A
Pulse discharge current I_{imp} (10/350) µs (line-line)	0.5 kA
Pulse discharge current I_{imp} (10/350) µs (line-earth)	0.5 kA

Environmental and real-life conditions

Ambient conditions

Degree of protection	IP20
Ambient temperature (operation)	-40 °C ... 80 °C
Ambient temperature (storage/transport)	-40 °C ... 80 °C
Altitude	≤ 6000 m (amsl)
Permissible humidity (operation)	5 % ... 95 %
Shock (operation)	30g (Half-sine / 11 ms / 3x ±X, ±Y, ±Z)
Vibration (operation)	5g (5 ... 500 Hz / 2.5 h / X, Y, Z)

Approvals

UL specifications

Maximum continuous operating voltage MCOV	264 V AC
	240 V DC
Nominal discharge current I_n	5 kA
Mode of protection	L-N
	L-G
	N-G
	(DC+) - (DC-)
	(DC+) - G
	(DC-) - G
Nominal voltage	240 V DC
Power distribution system	Single phase
	DC
Nominal frequency	50/60 Hz
Measured limiting voltage MLV (L-N)	1150 V
Measured limiting voltage MLV (L-G)	1180 V
Measured limiting voltage MLV (N-G)	1180 V
SPD Type	4CA

Standards and regulations

Standards/specifications	IEC 61643-11
Note	2011

EN 61643-11

Standards/specifications	EN 61643-11
Note	2012

Mounting

Mounting type	on base element

Drawings

Circuit diagram

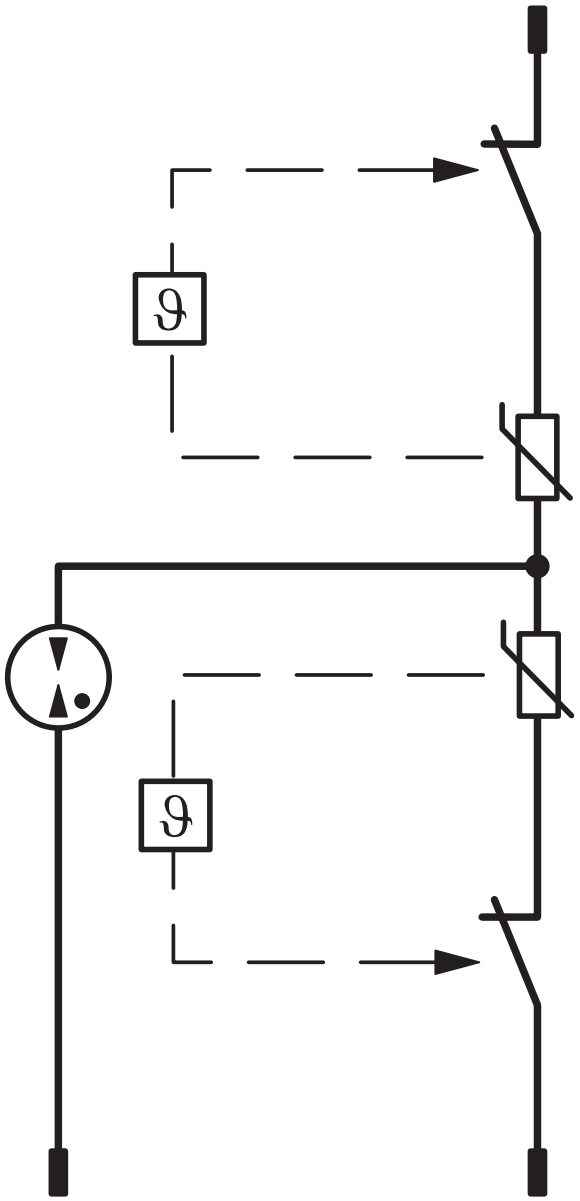

Dimensional drawing

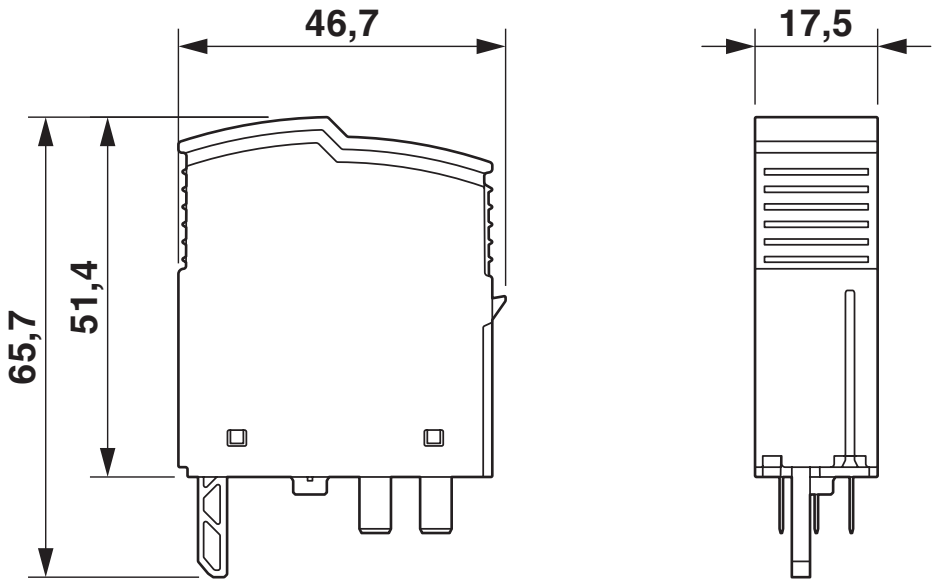

Approvals

To download certificates, visit the product detail page: https://www.phoenixcontact.com/us/products/2907923

cUL Recognized
Approval ID: FILE E 330181

UL Recognized
Approval ID: FILE E 330181

IECEE CB Scheme
Approval ID: NL-51083

EAC
Approval ID: RU C-DE.*09.B.00169

CCA
Approval ID: NTR-NL 7676

KEMA-KEUR
Approval ID: 71-103027

CSA
Approval ID: 13631

UAE-RoHS
Approval ID: 23-10-88891

DNV
Approval ID: TAE00002U7

cUL Recognized
Approval ID: FILE E 340736

UL Recognized
Approval ID: FILE E 340736

cULus Recognized

cULus Recognized

Classifications

ECLASS

ECLASS-11.0	27130890
ECLASS-13.0	27171292

ETIM

ETIM 8.0	EC002496

UNSPSC

UNSPSC 21.0	39121600

Environmental product compliance

EU RoHS

Fulfills EU RoHS substance requirements	Yes, No exemptions

China RoHS

Environment friendly use period (EFUP)	EFUP-E
	No hazardous substances above the limits

EU REACH SVHC

REACH candidate substance (CAS No.)	No substance above 0.1 wt%

Accessories

PLT-SEC-T3-230-FM-PT - Type 3 surge protection device

2907928

https://www.phoenixcontact.com/us/products/2907928



Type 2/3 surge protection, consisting of protective plug and base element with Push-in connection. For single-phase power supply network with integrated status indicator and remote signaling. Nominal voltage: 230 V AC/DC

PLT-SEC-T3-230-FM-UT - Type 3 surge protection device

2907919

https://www.phoenixcontact.com/us/products/2907919



Type 2/3 surge protection, consisting of protective plug and base element with screw connection. For single-phase power supply network with integrated status indicator and remote signaling. Nominal voltage: 230 V AC/DC

PLT-SEC-T3-230-P-UT/PT - Type 3 surge protection plug

2907923

https://www.phoenixcontact.com/us/products/2907923

PLT-SEC-T3-BE-FM-PT - Type 3 surge protection base element

2907929

https://www.phoenixcontact.com/us/products/2907929



Base element for protective plugs from the PLT-SEC-...-UT/PT product series with remote indication contact.

PLT-SEC-T3-BE-FM-UT - Type 3 surge protection base element

2907924

https://www.phoenixcontact.com/us/products/2907924

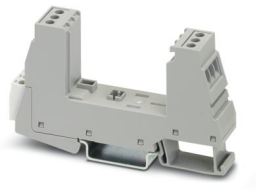

Base element for protective plugs from the PLT-SEC-...-UT/PT product series with remote indication contact.

Phoenix Contact 2024 © - all rights reserved
https://www.phoenixcontact.com

Phoenix Contact USA
586 Fulling Mill Road
Middletown, PA 17057, United States
(+717) 944-1300
info@phoenixcon.com