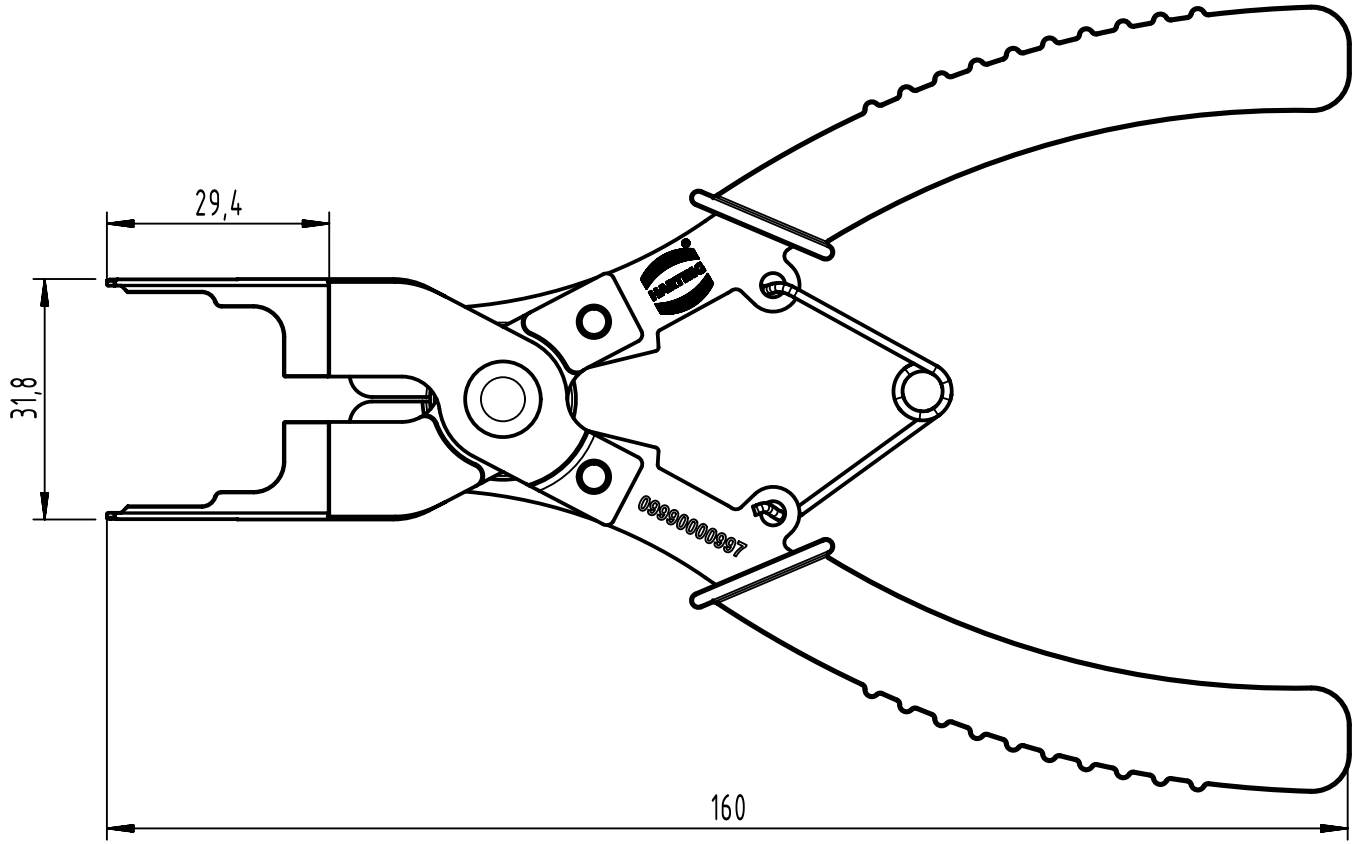

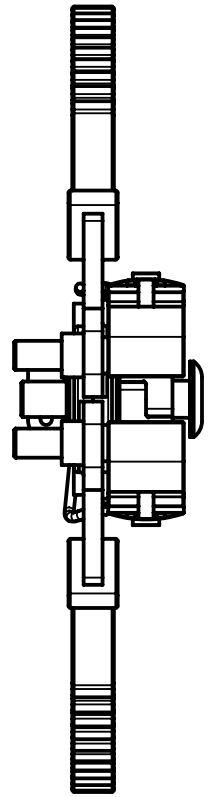

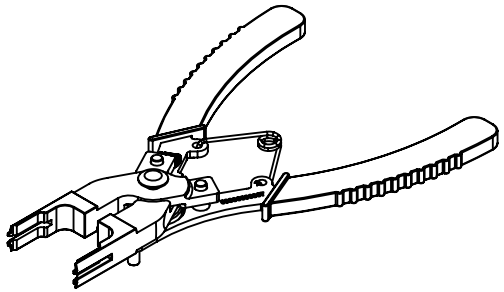

All Dimensions in mm Original Size DIN A4	Scale 1:1	Free size tol.		Ref. Sub.	
All rights reserved Department EL PD	Created by CHENSK	Inspected by WANGSTE	Standardisation 302077	Date 2021-05-25	State Final Release
HARTING D-32339 Espelkamp	Title Removal Tool Han F+B -Pliers				Doc-Key / ECM-Nr. 100954006/UGD/001/A 500000195608
	Type TB	Number 09 99 000 0997		Rev. A	Page 1/1

A4