THIS DRAWING IS UNPUBLISHED. RELEASED FOR PUBLICATION -,- .
© COPYRIGHT – By –TE connectivity ALL RIGHTS RESERVED.

LOC	DIST
H	–

REVISIONS

P	LTR	DESCRIPTION	DATE	DWN	APVD
	G2	ADD 3–0 PN PER ECR–022536	31JAN2012	A.S	M.W

CONNECTOR ASSEMBLY

EXEMPLARY LOADED

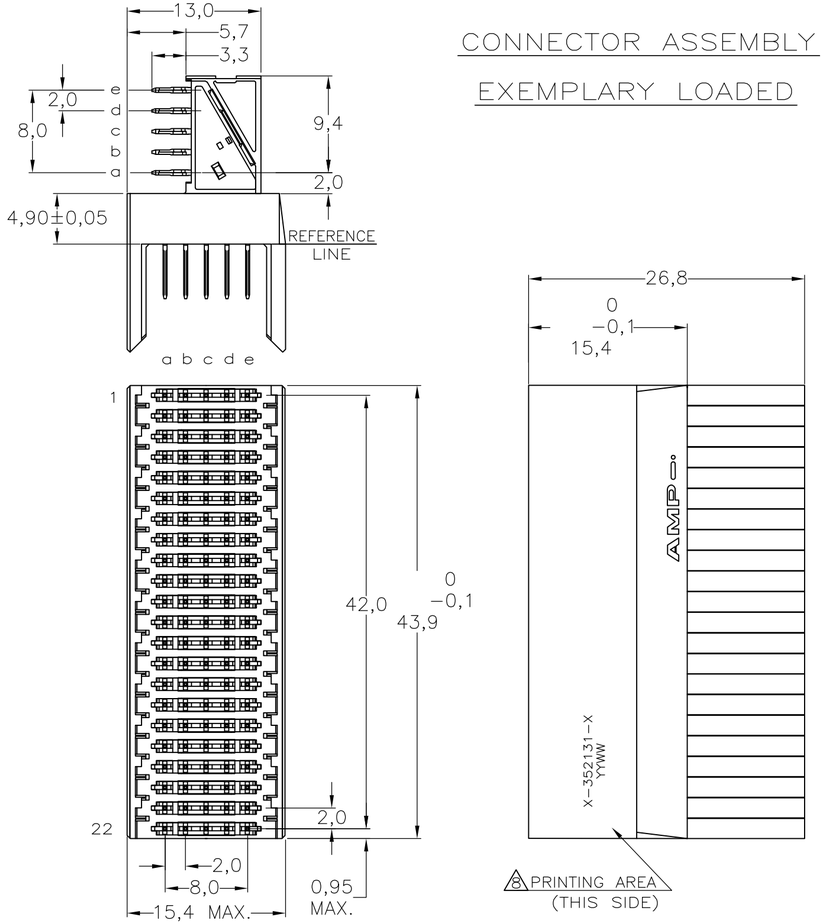

CONTACT DIMENSIONS

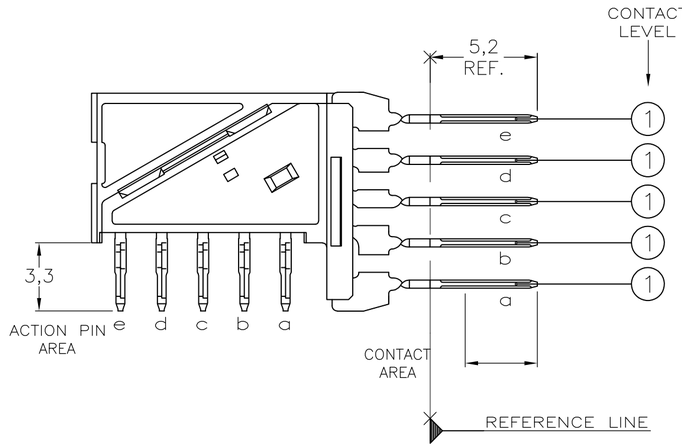

RECOMMENDED PCB–HOLE LAY–OUT

COMPONENT SIDE SHOWN

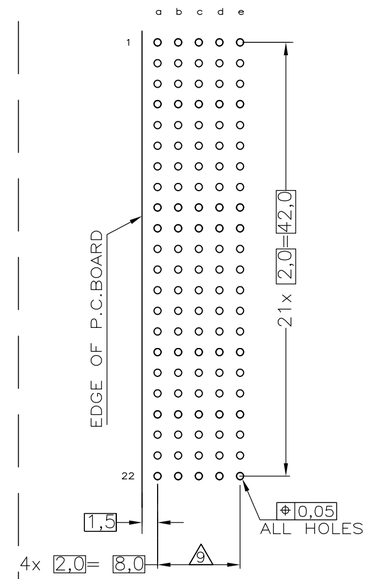

CONTACT LAYOUT

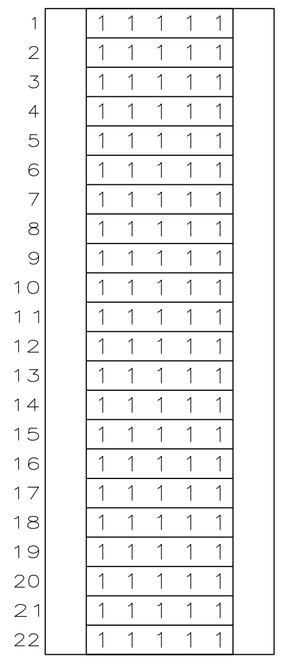

P.C.B. HOLE DIM. ACTION PIN
FOR DETAILS SEE
APPLICATION SPECIFICATION

NOTES:

1 MATERIAL HOUSING: GREY GLASSFILLED POLYESTER
UL 94 V–0
CONTACT: PHOSPHOR BRONZE

2 GENERAL PLATING SPECIFICATION: UNDERPLATING (ENTIRE CONTACT): 1,27µm NICKEL MIN. AND ACTION PIN: 0,5µm TIN–LEAD MIN.
FOR PLATING OF MATING SURFACES SEE APPLICABLE SPECIFICATION REFERENCE FOR EACH DASH NUMBER.

3 CONFORMS TO ALL TESTING ACCORDING IEC 61076–4–101 PERFORMANCE LEVEL 2.

4 CONFORMS TO ALL TESTING ACCORDING IEC 61076–4–101 PERFORMANCE LEVEL 1.

5 CONNECTOR TESTED AND QUALIFIED AGAINST TELCORDIA GR–1217–CORE QUALITY LEVEL III, CENTRAL OFFICE APPLICATIONS.

6 CONNECTOR TESTED AND QUALIFIED AGAINST TELCORDIA GR–1217–CORE QUALITY LEVEL III, UNCONTROLLED ENVIRONMENT APPLICATIONS.

7 CONNECTOR LUBRICATED WITH TELCORDIA GR–1217–CORE APPROVED LUBRICANT.

8 CONNECTOR MARKED WITH PARTNUMBER AND DATECODE

9 PLATED–THROUGH HOLES AT 2x2mm SQUARE GRID.

11 OBSOLETE PARTS: OBSOLETE CIS STREAMLINING PER D.RENAUD/D.SINISI

12 0.76um MIN GOLD PLATING AT MATING AREA.

11	CONSERVATION TREATMENT	CONTACT FINISH	PARTNUMBER
OBSOLETE	N	2 3 12	3–352131–0
	Y 7	2 6	~~1–352131–9~~
	Y 7	2 5	~~352131–9~~
	N	2 4	~~352131–4~~
	N	2 3	352131–1

THIS DRAWING IS A CONTROLLED DOCUMENT.

DIMENSIONS: mm

TOLERANCES UNLESS OTHERWISE SPECIFIED:
0 PLC ± –
1 PLC ± –
2 PLC ± –
3 PLC ± –
4 PLC ± –
ANGLES ± –

MATERIAL –
FINISH –

DWN L.v.d.HEIJDEN 15DEC97
CHK D. TRUREN 15DEC97
APVD F.v.KONINGSBRUGGE –
PRODUCT SPEC –
APPLICATION SPEC 114–19029
WEIGHT –

TE Connectivity

NAME
Z–PACK 2MM HM TYPE B22
110 POS. RIGHT ANGLE MALE
CONNECTOR ASSEMBLY

SIZE	CAGE CODE	DRAWING NO	RESTRICTED TO
A2	00779	C–352131	–

CUSTOMER DRAWING | SCALE NTS | SHEET 1 OF 1 | REV G2

352131