FCI PART NUMBER	DESCRIPTION
10129953-TXXXXYYLF	ExaMAX IO 2.0mm 4-PAIR 8-COLUMN SINGLE PAIR CABLE ASSEMBLY

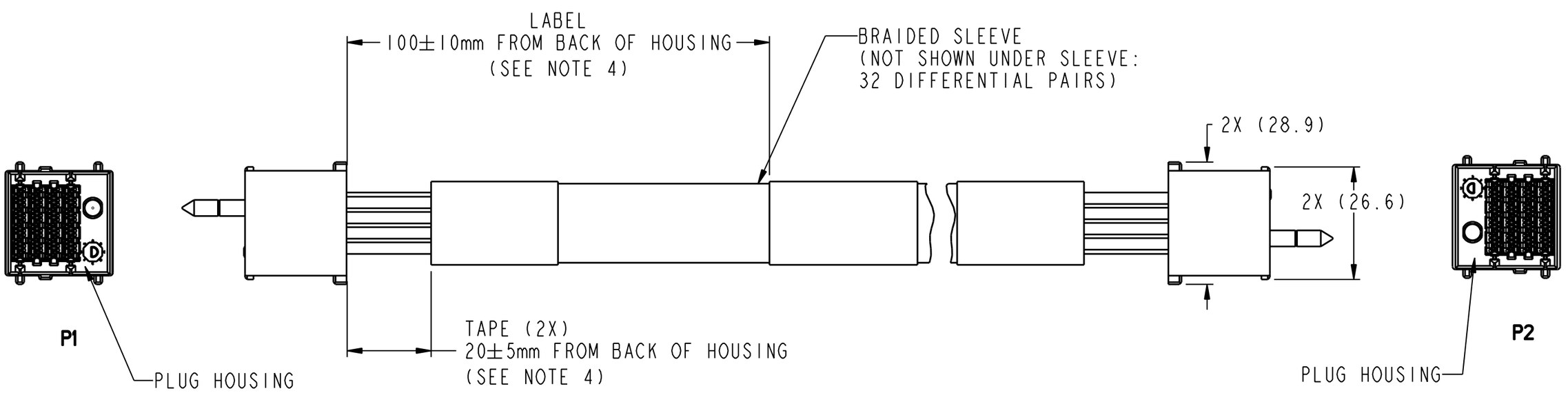

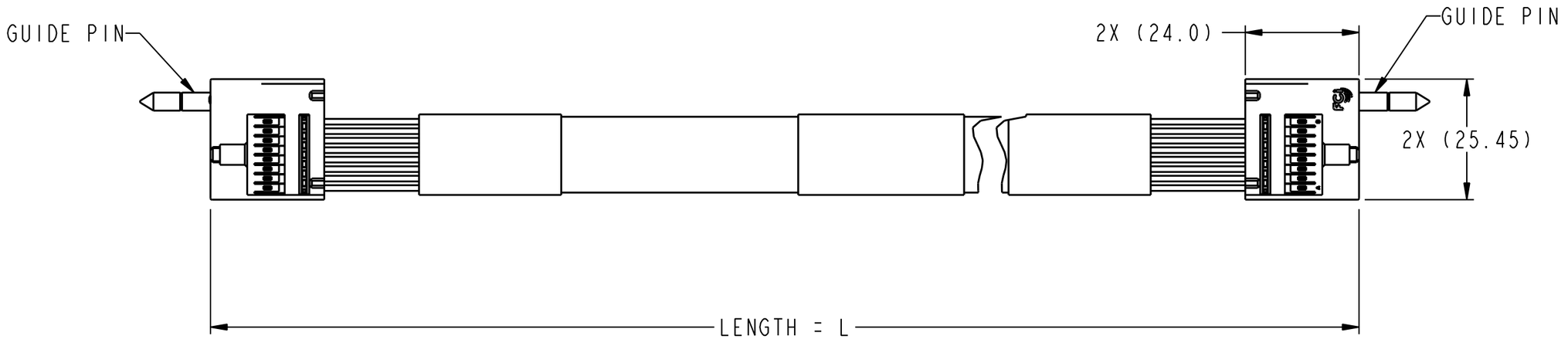

spec ref	-			dr	J. WINEY	2014-09-19	projection	mm	size A3	scale 1:1
tolerance std ASME Y14.5 -	TOLERANCES UNLESS OTHERWISE SPECIFIED			eng	K. WEBER	2014-09-19			ecn no	
				chr	K. WEBER	2014-09-19				
				appr			product family	-	rel level	In Work
surface ✓	linear	0.X	±	FCI	title	EXAMAX IO 2.0mm PITCH PASSIVE LATCH BACK PLANE CABLE ASSY			dwg no 10129953	rev 2
		0.XX	±							
		0.XXX	±							
	angular	0°	±°	www.fci.com	cat. no.	-	Product - Customer Drw		sheet 1 of 6	

Copyright FCI.

FCI PART NUMBER	DESCRIPTION
10129953-TXXXXYYLF	ExaMAX IO 2.0mm 4-PAIR 8-COLUMN SINGLE PAIR CABLE ASSEMBLY

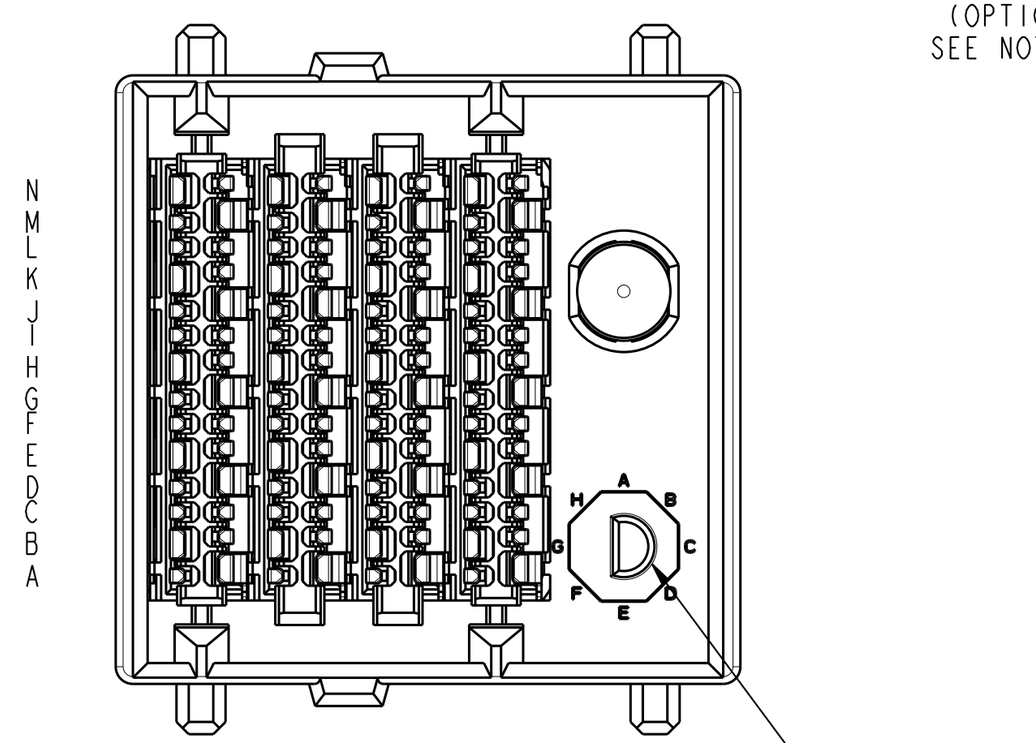

P1
SCALE 4:1

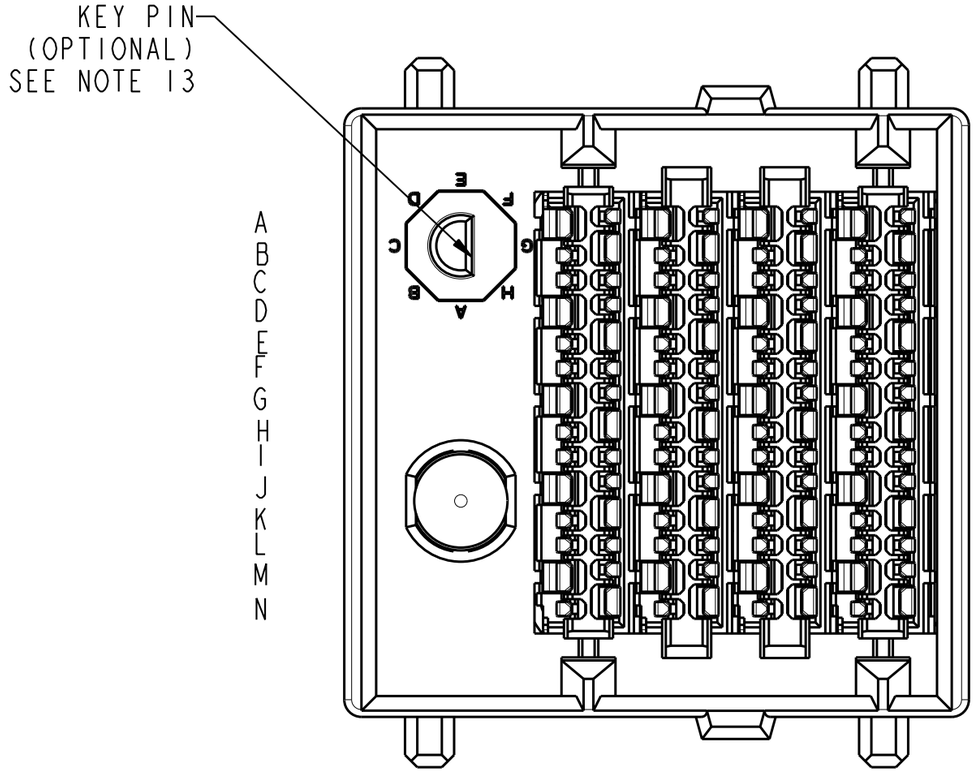

P2
SCALE 4:1

spec ref	-			dr	J. WINEY	2014-09-19	projection	mm	size A3 / scale 1:1
tolerance std ASME Y14.5	TOLERANCES UNLESS OTHERWISE SPECIFIED			eng	K. WEBER	2014-09-19			ecn no
				chr	K. WEBER	2014-09-19			rel level In Work
				appr			product family -		
surface ✓	linear	0.X	±	FCI	title: EXAMAX IO 2.0mm PITCH PASSIVE LATCH BACK PLANE CABLE ASSY		dwg no 10129953		rev 2
		0.XX	±						
		0.XXX	±						
	angular	0°	±°	www.fci.com	cat. no. -		Product - Customer Drw		sheet 2 of 6

Copyright FCI.

FCI PART NUMBER	DESCRIPTION
10129953-TXXXXYYLF	ExaMAX IO 2.0mm 4-PAIR 8-COLUMN SINGLE PAIR CABLE ASSEMBLY

PIN-OUT CONFIGURATION (P1 & P2)

SEE NOTE 18

1	2	3	4	5	6	7	8	
GND	~~LS2~~	GND	~~LS4~~	GND	~~LS6~~	GND	~~LS8~~	N
TX1+	GND	TX5+	GND	TX9+	GND	TX13+	GND	M
TX1-	TX3+	TX5-	TX7+	TX9-	TX11+	TX13-	TX15+	L
GND	TX3-	GND	TX7-	GND	TX11-	GND	TX15-	K
TX2+	GND	TX6+	GND	TX10+	GND	TX14+	GND	J
TX2-	TX4+	TX6-	TX8+	TX10-	TX12+	TX14-	TX16+	I
GND	TX4-	GND	TX8-	GND	TX12-	GND	TX16-	H
RX2-	GND	RX6-	GND	RX10-	GND	RX14-	GND	G
RX2+	RX4-	RX6+	RX8-	RX10+	RX12-	RX14+	RX16-	F
GND	RX4+	GND	RX8+	GND	RX12+	GND	RX16+	E
RX1-	GND	RX5-	GND	RX9-	GND	RX13-	GND	D
RX1+	RX3-	RX5+	RX7-	RX9+	RX11-	RX13+	RX15-	C
GND	RX3+	GND	RX7+	GND	RX11+	GND	RX15+	B
~~LS1~~	GND	~~LS3~~	GND	~~LS5~~	GND	~~LS7~~	GND	A
A	B	A	B	A	B	A	B	

spec ref	-			dr	J. WINEY	2014-09-19	projection	mm	size A3 / scale 1:1
tolerance std ASME Y14.5	TOLERANCES UNLESS OTHERWISE SPECIFIED			eng	K. WEBER	2014-09-19			ecn no
				chr	K. WEBER	2014-09-19			rel level In Work
				appr			product family -		
surface ✓	linear	0.X	±	FCI	title	EXAMAX IO 2.0mm PITCH PASSIVE LATCH BACK PLANE CABLE ASSY	dwg no	10129953	rev 2
		0.XX	±						
		0.XXX	±						
	angular	0°	±°	www.fci.com	cat. no. -	Product - Customer Drw			sheet 3 of 6

Copyright FCI.

IMLA WIRING LIST		
P1 END		P2 END
IMLA COLUMN		IMLA COLUMN
1		1
2		2
3		3
4		4
5		5
6		6
7		7
8		8

DETAILED WIRING LIST for COLUMN 1 (A IMLA) (SEE NOTE 16)				
P1 END			P2 END	
POSITION	SYMBOL		POSITION	SYMBOL
N1	GND		B1	GND
M1	TX1+		C1	RX1+
L1	TX1-		D1	RX1-
K1	GND		E1	GND
J1	TX2+		F1	RX2+
H1	TX2-		G1	RX2-
G1	GND		H1	GND
F1	RX2-		J1	TX2-
E1	RX2+		K1	TX2+
D1	GND		L1	GND
C1	RX1-		M1	TX1-
B1	RX1+		N1	TX1+
A1	GND		A1	GND
	~~LS1~~			~~LS1~~

DETAILED WIRING LIST for COLUMN 2 (B IMLA) (SEE NOTE 16)				
P1 END			P2 END	
POSITION	SYMBOL		POSITION	SYMBOL
N2	~~LS2~~		N2	~~LS2~~
M2	GND		A2	GND
L2	TX3+		B2	RX3+
K2	TX3-		C2	RX3-
J2	GND		D2	GND
I2	TX4+		E2	RX4+
H2	TX4-		F2	RX4-
G2	GND		G2	GND
F2	RX4-		H2	TX4-
E2	RX4+		I2	TX4+
D2	GND		J2	GND
C2	RX3-		K2	TX3-
B2	RX3+		L2	TX3+
A2	GND		M2	GND

Copyright FCI.

spec ref	-		dr	J. WINEY	2014-09-19	projection	mm	size A3 / scale 1:1
tolerance std ASME Y14.5 -	TOLERANCES UNLESS OTHERWISE SPECIFIED		eng	K. WEBER	2014-09-19			ecn no
			chr	K. WEBER	2014-09-19			rel level In Work
surface ✓	linear	0.X ±	appr			product family -		
		0.XX ±						
		0.XXX ±						
	angular	0° ±°						

FCI www.fci.com	title: EXAMAX IO 2.0mm PITCH PASSIVE LATCH BACK PLANE CABLE ASSY	dwg no 10129953	rev 2
	cat. no. -	Product - Customer Drw	sheet 4 of 6

Pro/E File · REV C · 2009-06-09

10129953-TXXXXYYLF

CABLE INDENTIFICATION INFORMATION		
"T"	WIRE SIZE	DESCRIPTION
A	30 AWG	30AWG, HIGH SPEED SINGLE PAIR, CABLE
B	26 AWG	26AWG, HIGH SPEED SINGLE PAIR, CABLE

30AWG PART NUMBERS		
LENGTH (DIM "L") = METERS		
CABLE ASSEMBLY PART NUMBER	=	METER(S)
10129953-A0050YYLF	=	0.50
10129953-A0100YYLF	=	1.00
10129953-A0150YYLF	=	1.50
10129953-A0200YYLF	=	2.00
10129953-A0250YYLF	=	2.50
10129953-A0300YYLF	=	3.00
10129953-A0350YYLF	=	3.50
10129953-A0400YYLF	=	4.00
10129953-A0450YYLF	=	4.50
10129953-A0500YYLF	=	5.00
10129953-A0550YYLF	=	5.50
10129953-A0600YYLF	=	6.00

26AWG PART NUMBERS		
LENGTH (DIM "L") = METERS		
CABLE ASSEMBLY PART NUMBER	=	METER(S)
10129953-B0050YYLF	=	0.50
10129953-B0100YYLF	=	1.00
10129953-B0150YYLF	=	1.50
10129953-B0200YYLF	=	2.00
10129953-B0250YYLF	=	2.50
10129953-B0300YYLF	=	3.00
10129953-B0350YYLF	=	3.50
10129953-B0400YYLF	=	4.00
10129953-B0450YYLF	=	4.50
10129953-B0500YYLF	=	5.00
10129953-B0550YYLF	=	5.50
10129953-B0600YYLF	=	6.00

MODULE DESCRIPTION	DESIGNATION REPRESENTED IN DASH NUMBER								
W/O END GUIDE MODULE	01								
RIGHT GUIDANCE MODULE	1A	1B	1C	1D	1E	1F	1G	1H	1J (NO KEY)
LEFT GUIDANCE MODULE	1L	1M	1N	1P	1R	1T	1U	1V	1W (NO KEY)

Copyright FCI.

spec ref -		dr	J. WINEY	2014-09-19	projection	mm	size A3	scale 1:1
tolerance std ASME Y14.5 -	TOLERANCES UNLESS OTHERWISE SPECIFIED	eng	K. WEBER	2014-09-19			ecn no	
		chr	K. WEBER	2014-09-19			rel level	In Work
		appr			product family -			
surface	linear 0.X ±	FCI	title	EXAMAX IO 2.0mm PITCH PASSIVE LATCH BACK PLANE CABLE ASSY		dwg no	10129953	rev 2
	linear 0.XX ±							
	linear 0.XXX ±							
	angular 0° ±°	www.fci.com	cat. no. -	Product - Customer Drw			sheet 5 of 6	

FCI PART NUMBER	DESCRIPTION
10129953-TXXXXLF	ExaMAX IO 2.0mm 4-PAIR 8-COLUMN SINGLE PAIR CABLE ASSEMBLY

NOTES:

1. ASSEMBLED LENGTH TOLERANCE: ±2% OF LENGTH

2. CONNECTOR MATERIALS:
   HOUSING: HIGH TEMP THERMOPLASTIC, BLACK, UL94-V0
   CONTACT: COPPER ALLOY
   RETENTION BAR: HIGH TEMP THERMOPLASTIC, BLACK, UL94-V0
   PLASTIC WOVEN BRAID: PET
   TAPE: TBD
   LABEL: TBD

3. CONTACT PLATING:
   SEPARABLE INTERFACE:
   PERFORMANCE-BASED PLATING, QUALIFIED TO MEET THE REQUIREMENTSOF FCI PRODUCT SPECIFICATION GS-12-1096 INCLUDING TELCORDIA GR-1217-CORE (NOVEMBER 1995) CENTRAL OFFICE TEST SEQUENCE

4. LABEL DETAILS:
   MANUFACTURE CODE OR NAME
   FCI PART NUMBER - REVISION
   DATA CODE (YYYY/MM/DD FORMAT) - SERIAL #
   COUNTRY OF ORIGIN

   FONT SHALL BE CLEARLY VISIBLE AND BLACK IN COLOR

5. CABLE PACKAGING PER FCI GLOBAL STANDARD: GS-14-1272

6. PACKAGING MEETS GS-14-920 LEAD FREE LABELING SPECIFICATION

7. LEAD FREE PRODUCTS MEET EUROPEAN UNION DIRECTIVES AND OTHER COUNTRY REGULATIONS AS DESCRIBED IN GS-47-0004

8. REFERENCE APPLICATION SPEC: GS-20-0412

9. ALL CABLE ASSEMBLIES SHALL BE TESTED 100% FOR CONTINUITY AS DEFINED IN WIRING LIST

10. UNLESS OTHERWISE SPECIFIED ALL CABLE ASSEMBLIES SHALL BE 100% HI-POT TESTED BY APPLYING 300V DC FOR MINIMUM OF 10ms, UNLESS ACTIVE COMPONENTS ARE USED IN THE ASSEMBLY

11. A "△-" SYMBOL WILL BE NEXT TO ANY DIMENSION, VIEW, OR NOTE WHICH HAS BEEN MODIFIED WITH THE CURRENT DRAWING REVISION. THE CURRENT REVISION WILL BE SHOWN IN THE SYMBOL

12. MATING BOARD CONNECTOR P/N: 10121056-11KLF

13. UNLESS OTHERWISE SPECIFIED, KEY/KEY BUSHING IS NOT INCLUDED

14. CONNECTOR ASSEMBLIES SHOWN ARE FOR REFERENCE ONLY AND MAY NOT SHOW ALL PART DETAIL. REFERENCE CONNECTOR ASSEMBLY DRAWINGS FOR COMPLETE DETAILS

15. FINISHED ASSEMBLY SHALL BE IN A SUITABLY SIZED POLY BAG OR EQUIVALENT

16. WIRING LIST IS SHOWN FOR COLUMNS 1 AND 2. ALL OTHER COLUMNS FOLLOW THE SAME PATTERN AS SHOWN IN THE IMLA WIRING LIST

17. APPLICABLE PANEL MOUNTING BRACKET PART NUMBERS:
    SINGLE PORT: 10127037-101
    DUAL PORT: 10127037-102
    FOUR PORT: 10127037-104

18. PINS FOR LOW-SPEED CIRCUITS L1-L8 ARE NOT TERMINATED

Copyright FCI.

spec ref	-			dr	J. WINEY	2014-09-19	projection	mm	size A3 / scale 3:10
tolerance std ASME Y14.5	TOLERANCES UNLESS OTHERWISE SPECIFIED			eng	K. WEBER	2014-09-19			ecn no
				chr	K. WEBER	2014-09-19			
surface ✓	linear	0.X	±	appr			product family -		rel level In Work
		0.XX	±	FCI	title	EXAMAX IO 2.0mm PITCH PASSIVE LATCH BACK PLANE CABLE ASSY	dwg no 10129953		rev 2
		0.XXX	±	www.fci.com	cat. no. -		Product - Customer Drw		sheet 6 of 6
	angular	0°	±°						