213890-2 ✔ ACTIVE

AMP | AMP Circular Plastic Connectors, Circular Plastic Connectors Series 5

TE Internal #: 213890-2

3 Position Circular Power Connector, Housing, 250 VDC, Wire-to-Wire, Sealable, Wire & Cable, Receptacle, AMP Circular Plastic Connectors

View on TE.com >

Connectors > Power Connectors > Circular Power > Circular Power Connectors

Connector Product Type: **Housing**

Operating Voltage: **250 VDC**

Connector System: **Wire-to-Wire**

Number of Positions: **3**

Sealable: **Yes**

Features

Product Type Features

Connector Seal & Plug Type	Peripheral
Connector Product Type	Housing
Connector System	Wire-to-Wire
Sealable	Yes
Connector & Contact Terminates To	Wire & Cable
Connector & Housing Type	Receptacle
Circular Connector Shell Type	All Plastic

Configuration Features

Reverse Numbering	With
Number of Positions	3
Number of Power Positions	3
Number of Signal Positions	0

Electrical Characteristics

Operating Voltage	250 VAC

Contact Features

Reverse Gender	Yes
Contact Type	Socket
Contact Protection	With

Mechanical Attachment

Mating Retention Type	Threaded Coupling
Thread Size	15/16-20 UNEF – 2A
Polarization Code	A
Mating Alignment Type	Keyed
Mating Alignment	With
Mating Retention	With
Panel Mount Feature	Without

Housing Features

Body Orientation	Straight
Housing Color	Black
Housing Material	Nylon
Circular Connector Shell Size	17

Dimensions

Compatible Insulation Diameter Range	3.96 – 6.6 mm[.156 – .26 in]

Usage Conditions

Operating Temperature Range	-55 – 105 °C[-67 – 221 °F]
Fluid Resistance	Immersion

Operation/Application

Circuit Application	Power & Signal
Shielded	No

Industry Standards

UL Flammability Rating	UL 94V-0

Packaging Features

Packaging Quantity	100
Packaging Method	Bag

Product Compliance

For compliance documentation, visit the product page on TE.com>

EU RoHS Directive 2011/65/EU	Compliant
EU ELV Directive 2000/53/EC	Compliant
China RoHS 2 Directive MIIT Order No 32, 2016	No Restricted Materials Above Threshold
EU REACH Regulation (EC) No. 1907/2006	Current ECHA Candidate List: JUNE 2025 (250) Candidate List Declared Against: JUNE 2025 (250) Does not contain REACH SVHC
Halogen Content	BFR/CFR/PVC Free, but Br/Cl >900 ppm in other sources.
Solder Process Capability	Not applicable for solder process capability

Product Compliance Disclaimer

This information is provided based on reasonable inquiry of our suppliers and represents our current actual knowledge based on the information they provided. This information is subject to change. The part numbers that TE has identified as EU RoHS compliant have a maximum concentration of 0.1% by weight in homogenous materials for lead, hexavalent chromium, mercury, PBB, PBDE, DBP, BBP, DEHP, DIBP, and 0.01% for cadmium, or qualify for an exemption to these limits as defined in the Annexes of Directive 2011/65/EU (RoHS2). Finished electrical and electronic equipment products will be CE marked as required by Directive 2011/65/EU. Components may not be CE marked. Additionally, the part numbers that TE has identified as EU ELV compliant have a maximum concentration of 0.1% by weight in homogenous materials for lead, hexavalent chromium, and mercury, and 0.01% for cadmium, or qualify for an exemption to these limits as defined in the Annexes of Directive 2000/53/EC (ELV). Regarding the REACH Regulation, the information TE provides on SVHC in articles for this part number is based on the latest European Chemicals Agency (ECHA) 'Guidance on requirements for substances in articles' posted at this URL: https://echa.europa.eu/guidance-documents/guidance-on-reach

Compatible Parts

TE Part # 4-2407269-4
CAP, CPC, SIZE 17 RECP, YELLOW

TE Part # 207445-3
SEALING CAP ASSY, 17,CPC ROHS Compliant

TE Part # 2423641-1
SEAL CAP ASSY, SZ17, SR 5&6, PLASTIC LAN

TE Part # 213905-1
CPC PLUG ASSY,SERIES 5,SZ 17-3

TE Part # 213810-1
CPC COUPLING RING SIZE 17

TE Part # 81665-2
FLANGE GASKET CPC

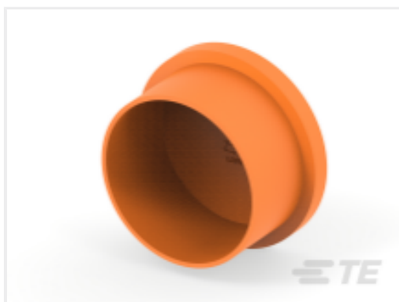

TE Part # 4-2407269-1
CAP, CPC, SIZE 17 RECP, ORANGE

TE Part # 4-2407269-3
CAP, CPC, SIZE 17 RECP, RED

TE Part # 208652-1
SEALING CAP ASSY,SZ 17,CPC

TE Part # 2423641-2
SEAL CAP ASSY, SZ17, SR 5&6, METAL BEAD

TE Part # 4-2407269-2
CAP, CPC, SIZE 17 RECP, BLACK

TE Part # 213890-1
CPC RCPT,IN-LINE,SRS 5,SZ 17-3

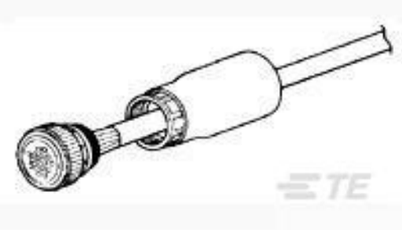

TE Part # 54011-3
CPC STRAIN RELIEF,SIZE 17

TE Part # 54011-1
CPC STRAIN RELIEF,SIZE 17

Also in the Series | AMP Circular Plastic Connectors

Circular Connector Backshells & Clamps(1)

Circular Power Connectors(10)

Connector Contacts(18)

Connector Hardware(10)

Power Contacts(18)

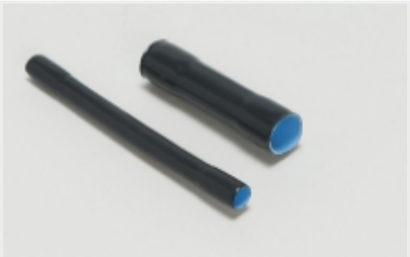

Sealing Sleeves(2)

Also in the Series | Circular Plastic Connectors Series 5

Circular Power Connectors(10)

Connector Contacts(18)

Power Contacts(18)

Customers Also Bought

TE Part #CAT-C73765-M1E
M12 Field Installable Unshielded

TE Part #282314-003
81044/12-22-2

TE Part #66101-2
III+ SKT,18-16,TIN-LEAD,LP

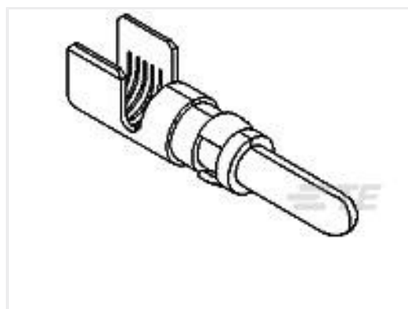

TE Part #213845-1
POWERBAND CONT ASSY,SILVER PLT

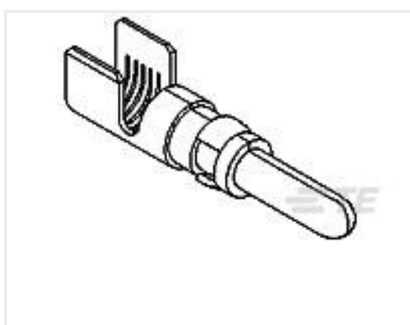

TE Part #213845-3
POWERBAND CONT ASSY,SILVER PLT

TE Part #213847-3
POWERBAND CONT ASSY,SILVER PLT

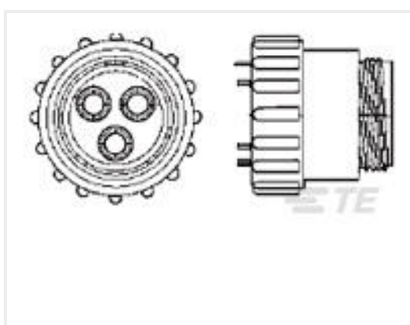

TE Part #213905-1
CPC PLUG ASSY,SERIES 5,SZ 17-3

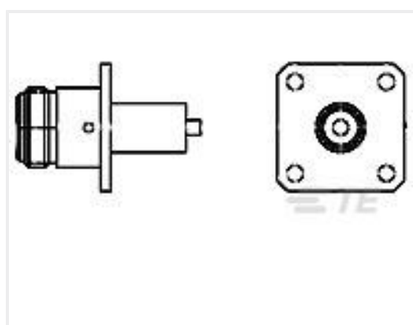

TE Part #1057290-1
3052 1201 10,N SERIES FM PLUG

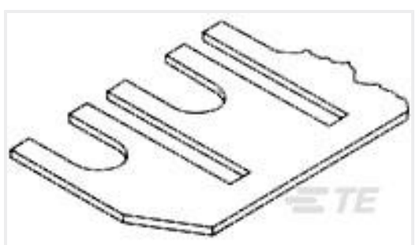

TE Part #5-1437644-4
J8-2=J8-XX JUMPER

Documents

Product Drawings

CPC RECPT SEALED SIZE 17-3

English

CAD Files

3D PDF

English

Customer View Model

ENG_CVM_213890-2_A.2d_dxf.zip

English

Customer View Model

ENG_CVM_213890-2_A.3d_igs.zip

English

Customer View Model

ENG_CVM_213890-2_A.3d_stp.zip

English

3D PDF

3D

Customer View Model

ENG_CVM_CVM_213890-2_H.2d_dxf.zip

English

Customer View Model

ENG_CVM_CVM_213890-2_H.3d_igs.zip

English

Customer View Model

ENG_CVM_CVM_213890-2_H.3d_stp.zip

English

By downloading the CAD file I accept and agree to the Terms and Conditions of use.

Datasheets & Catalog Pages

AMP Circular Connectors for Commercial Signal & Power Applications

English

Product Specifications

Product Specification

English

Product Specification

English

Instruction Sheets

Instruction Sheet (U.S.)

English

Agency Approvals

CSA Certificate

English

CSA Certificate

English