Isolated Dual Channel Gate Driver Evaluation Board User's Manual

EVBUM2817/D

Introduction

This user guide supports the evaluation board for the NCP5156x. It should be used in conjunction with the NCP5156x and NCV5156x datasheets as well as **onsemi**'s application notes and technical support team. Please visit **onsemi**'s website at www.onsemi.com.

This document describes the proposed solution for 5 kV_{RMS} isolated dual channel gate driver using the NCP51561. This user's guide also includes information regarding operating procedures, input/output connections, an electrical schematic, printed circuit board (PCB) layout, and a bill of material (BOM) for each evaluation board.

These evaluation boards can be used to evaluate:

- NCP51561xyDWR2G
- NCV51561xyDWR2G
- NCP51560xyDWR2G
- NCP51563xyDWR2G
- NCV51563xyDWR2G

Description

The NCP5156x are isolated dual−channel gate drivers with 4.5−A/9−A source and sink peak current respectively. They are designed for fast switching to drive power MOSFETs, and SiC MOSFET power switches. The NCP5156x offers short and matched propagation delays.

Two independent and 5 kV_{RMS} internal galvanic isolation from input to each output and internal functional isolation between the two output drivers allows a working voltage of up to 1500 VDC. This driver can be used in any possible configurations of two low side, two high−side switches or a half−bridge driver with programmable dead time. An ENA/DIS pin enable or disable both outputs simultaneously when set high or low for ENABLE or DISABLE mode respectively.

The NCP5156x offer other important protection functions such as independent under−voltage lockout for both gate drivers and a Dead Time adjustment function.

Key Features

- Flexible: Dual Low−Side, Dual High−Side or Half−Bridge Gate Driver
- Independent UVLO Protections for Both Output Drivers
- Output Supply Voltage from 6.5 V to 30 V with 5−V, 8−V for MOSFET, 13−V and 17−V UVLO for SiC, Thresholds
- 4.5−A Peak Source, 9−A Peak Sink Output
- Common Mode Transient Immunity CMTI >200 V/ns
- Propagation Delay Typical 36 ns with
  - 5 ns Max Delay Matching per Channel
  - 5 ns Max Pulse−Width Distortion
- User Programmable Input Logic
  - Single or Dual−Input Modes Via ANB (NCP51561/563 only)
  - ENABLE or DISASBLE Mode

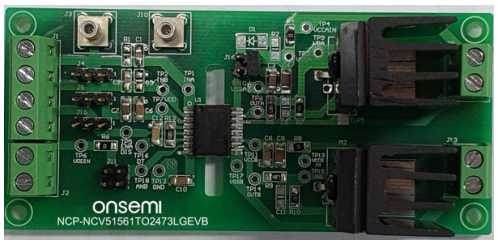

Type−A

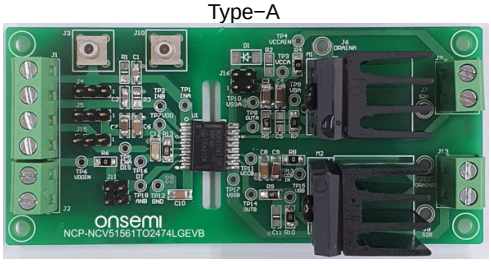

Type−B

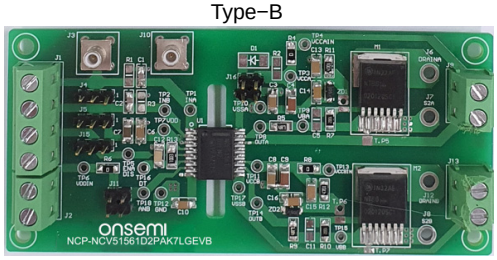

Type−C

Figure 1. Evaluation Board Picture

PIN CONNECTIONS

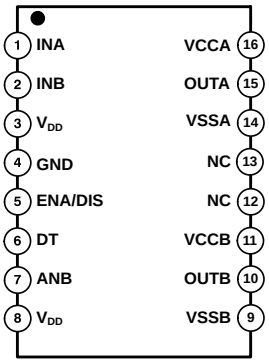

FUNCTIONAL BLOCK DIAGRAM

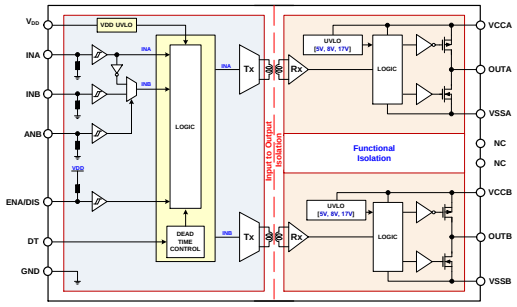

© Semiconductor Components Industries, LLC, 2021

Key Features (continued)

- User Programmable Dead−Time
- Available Package Footprint
  - **Type−A : TO−220, TO−3P, TO−247, D−PAK, and D2PAK**
  - **Type−B : TO−247−4L**
  - **Type−C : D2PAK−7L**

EVALUATION BOARD OPERATION

This section describes how to operate the NCP51561 evaluation board (EVB). Make external connections to the NCP51561 EVB using either the installed test−points or by installing wires into the connectors. The main connections that must be made to the EVB are the analog supply voltage, input signal, and output load and monitoring equipment.

Features

- Evaluation board for the NCP51561 product family in a wide body SOIC−16 package.
- 3−V to 5.0−V V_{DD} power supply range, and up to 30−V V_{CCA}/V_{CCB} power supply range.
- 4.5−A and 9−A source/sink current driving capability.
- TTL −compatible inputs
- Allowable input voltage up to 18−V with for INA, INB, and ANB pins.
- Onboard trimmer potentiometer for dead−time programming.
- 3−position header with for INA, INB, and ENA/DIS pins.
- 2−position header with for ANB pin.
- Support for half−bridge test with MOSFETs, and SiC MOSFETs with connection to external power stage.

Power and Ground

NOTE: Connecting the all power supplies in reverse polarity (backwards) will instantly device when power is turned on and device damage can result.

The primary side of the EVM (V_{DD}) operates from a single 3−V to 5.0−V power supply and connected via J2. Test point (TP6 and TP7) is available for monitoring the primary power supply.

The EVM provides connections for evaluating the output side (V_{CCA}, V_{SSA}, V_{CCB}, and V_{SSB}) power supplies for the channel A and B, from a minimum 6.5−V to maximum 30−V for 5−V UVLO version as shown in Figure 4 and Figure 5. V_{CCA} and V_{CCB} can be monitored via TP3 and TP11, respectively.

The V_{CCA} and V_{CCB} pin should be bypassed with a capacitor with a value of at least ten times the gate capacitance, and over 100 nF and located as close to the device as possible for the purpose of decoupling. A low ESR, ceramic surface mount capacitor is necessary. We had recommends using 2 capacitors; a over 100 nF ceramic surface−mount capacitor, and another a tantalium or electrolytic capacitor of few microfarads added in parallel.

Input and Output

1. Connection of primary−side power supply to the V_{DD} connector **[J2]**.
2. Connection of secondary−side power supply to the V_{CCA} and V_{CCB} connector **[J9, and J13]**.
3. Connection of INA signal to the SIGNAL connector **[J1−1, and J4]**.
4. Connection of INB signal to the SIGNAL connector **[J1−2, and J5]**.
5. Connection of ENABLE or DISABLE signal to the ENA/DIS connector **[J1−3, and J15]**.
6. Connection of ANB signal to the ANB jumper **[J11]**.

Notes for NCP51560/563 Use on these Boards

NCP51560:

- Unsolder NCP51561 unit and solder back NCP51560 option you want to test.
- Please don’t use any features related to ANB pin − see jumper sections.

NCP/V51563:

- Just unsolder NCP51561 unit and solder back NCP51563/NCV51563 option you want to test.
- All the rest stays unchanged.

Evaluation Board Jumper Setting

Table 1. EVB JUMPER SETTING

Jumper	Jumper Setting Options		Default Setting
J4−INA	Option1	Jumper not installed, INA/PWM signal provided by external signal and this pin is default low if left open	Option1
	Option2	Jumper on J4−INA−2 and J4−INA−3 set INA low	
	Option3	Jumper on J4−INA−2 and J4−INA−1 set INA high	
J5−INB	Option1	Jumper not installed, INB signal provided by external signal and this pin is default low if left open	Option1
	Option2	Jumper on J5−INB−2 and J5−INB−3 set INB low	
	Option3	Jumper on J5−INB−2 and J5−INB−1 set INB high	
J11−ANB	Option1	Jumper on J11−ANB−2 and J11−ANB−4 set ANB low for dual input mode	Option1
	Option2	Jumper on J11−ANB−1 and J11−ANB−3 set ANB high for single input (PWM) mode	
J15−ENA/DIS	Option1	Jumper not installed, DISABLE signal provided by external signal and this pin is default low if left open	Option2
	Option2	Jumper on J15−ENA/DIS−2 and J15−ENA/DIS−3 set DISABLE low (Or ENABLE low)	
	Option3	Jumper on J15−ENA/DIS−2 and J15−ENA/DIS−1 set DISABLE high (Or ENABLE high)	
T.P1	Option1	Jumper on T.P1−1 and T.P1−2 for half−bridge application	Option2
	Option2	Jumper off T.P1−1 and T.P1−2 for bench test.	
T.P2	Option1	Jumper on T.P2−1 and T.P2−2 and jumper on J16−2 and J16−4 for single power supply (VCCA = VCCB)	Option1
	Option2	Jumper on T.P2−1 and T.P2−2 and and jumper on J16−1 and J16−3 for VCCA bootstrap supply	
T.P3	Option1	Jumper on T.P3−1 and T.P3−2 for single power supply (e.g. VSSA = VSSB)	Option1
	Option2	Jumper off T.P3−1 and T.P3−2 for dual power supply	
T.P4 T.P5	Option1	Jumper on T.P4−1 and T.P4−2 for negative gate drive bias.	Option2
	Option2	Jumper on T.P5−1 and T.P5−2 for unipolar gate drive.	
T.P6 T.P7	Option1	Jumper on T.P6−1 and T.P6−2 for negative gate drive bias.	Option2
	Option2	Jumper on T.P7−1 and T.P7−2 for unipolar gate drive.	

Evaluation Board Setting before Power Up

1. If the ENABLE mode is used (e.g. NCP51561xA version), ENA/DIS pin (PIN5) should be connected to V_{DD} (PIN3 or PIN8) through a wire−bridge between pin 1 and pin 2 of J15 or this pin is default HIGH if left open.
   On the other hand, if using the DISABLE mode(e.g. NCP51561xB version), should be connect ENA/DIS pin to GND pin through a wire−bridge between pin 2 and pin 3 of J15.
2. If using the dual input mode, should be ANB pin (PIN7) connected to GND (PIN4) through a wire−bridge between pin 2 and pin 4 of J11.
   On the other hand, if using the single input mode, should be connect ANB pin to V_{DD} pin through a wire−bridge between pin 1 and pin 3 of J11.
3. Should be connect to the resistance between DT pin (pin6) and GND (pin4) for dead−time control mode. In addition, Cross−conduction between both driver outputs (OUTA, and OUTB) is not allowed with minimum dead time (t_{DTMIN}) typically 10 ns when the DT pin is floating (Open).

Bench Setup

The bench setup diagram includes the function generator, power supplies and oscilloscope connections.

Follow the connection procedure below and use Figure 2 as a reference.

- Make sure all the output of the function generator, power supplies are disabled before connection.
- Function generator channel−A channel applied on INA (J4 or J1 pin−1) ↔ TP1 as seen in Figure 2.
- Function generator channel−B channel applied on INB (J5 or J1 pin−2) ↔ TP2 as seen in Figure 2.
- If the ENABLE mode is used, ENA/DIS pin (PIN5) should be connected to V_{DD} (PIN3 or PIN8) through a wire−bridge between pin 1 and pin 2 of J15.
  On the other hand, if using the DISABLE mode , should be connect ENA/DIS pin (PIN5) to GND pin (PIN4) through a wire−bridge between pin 2 and pin 3 of J15.
- If using the dual input signals (INA and INB) with same polarity, should be DT pin (PIN6) connected to V_{DD} (PIN3 or 8).
  On the other hand, if using the dual input signals with opposite polarity, should be connect to the resistance (R13) between DT pin (pin6) and GND (pin4) or DT pin is floating (Open).
- If using the dual input mode, should be ANB pin (PIN7) connected to GND (PIN4) through a wire−bridge between pin 2 and pin 4 of J11.
  On the other hand, if using the single input mode, should be connect ANB pin (PIN7) to V_{DD} pin (PIN3 or 8) through a wire−bridge between pin 1 and pin 3 of J11.
- Power supply #1: positive node applied on J2 pin−1 (or TP6), and negative node applied on J2 pin−2.
- Power supply #2: positive node applied on J9 pin−1 (or TP4), negative node connected directly to J9 pin−2 (or TP10) and should be connected to VAIN and V_{CCA} through a wire−bridge between pin 2 and pin 4 of J16.
- Power supply #3: positive node applied on J13 pin−1 (or TP13), negative node connected directly to J13 pin−2 (or TP17).
- Oscilloscope channel−A probes TP8 ↔ TP10, smaller measurement loop is preferred.
- Oscilloscope channel−B probes TP14 ↔ TP17, smaller measurement loop is preferred.

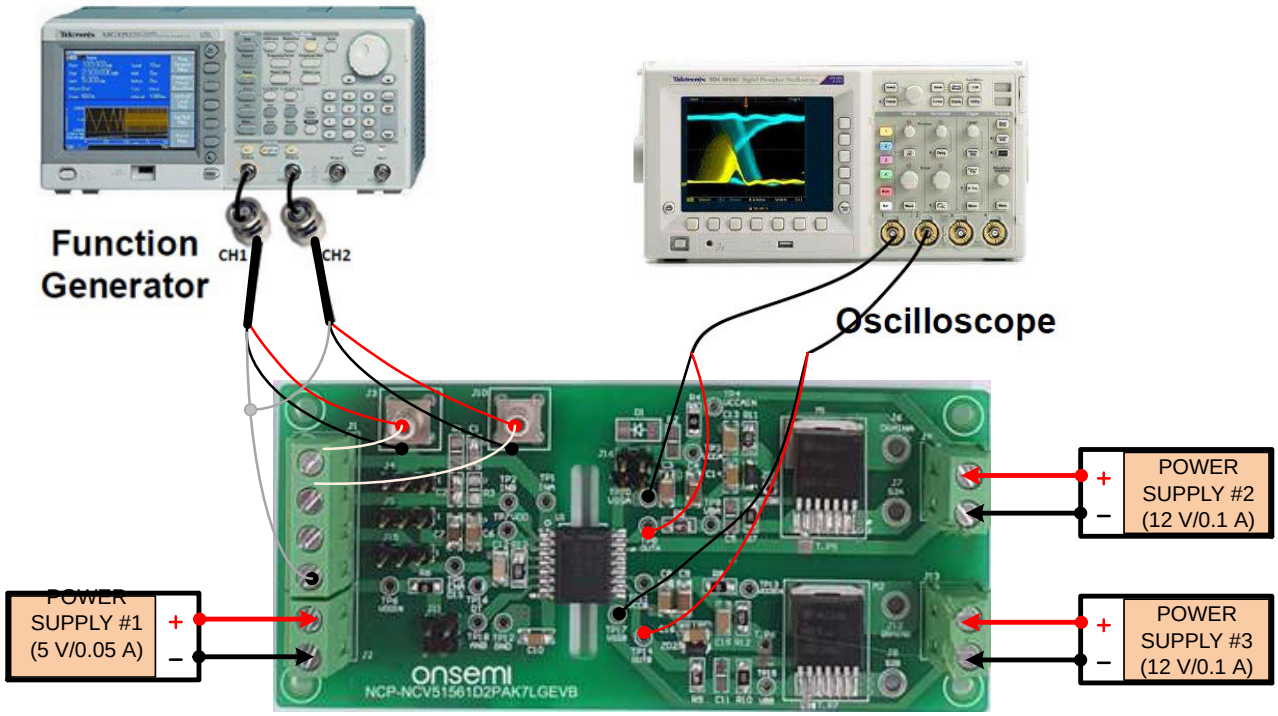

Figure 2. Bench Setup Diagram and Configuration

Power−Up and Power Down Procedure

Power Up

1. Could be connect VSSA pin to VSSB pin through a wire−bridge between pin 1 and pin 2 of T.P3, if the Half−Bridge application is not used.
2. Enable power supply through pin1 of J2 V_{DD} connector in primary−side.
3. Enable power supply through pin1 of J9 V_{CCA} connector and through pin1 of J13 V_{CCB} connector in secondary−side. Measure the quiescent current of V_{CCA}, and V_{CCB} on DMM1 and DMM2 ranges from 0.5 mA to approximately 1.0 mA if everything is set correctly.
4. Examples of implementing negative gate drive bias:
   A Should be connect switches source pins (S2A, and S2B) to ZD1 and ZD2 pin through a wire−bridge between pin 1 and pin 2 of T.P4 and T.P6 , if the use the negative gate drive bias. The negative bias is set by the Zener diode voltage.
   B Should be connect switches source pins (S2A, and S2B) to VSSA and VSSB pins through a wire−bridge between pin 1 and pin 2 of T.P5 and T.P5 , if the use the unipolar gate driving. **(Default)**
5. Enable the function generator, two−channel outputs: channel−A and channel−B;
6. There will be:
   A Stable pulse output on the channel−A and channel−B in the oscilloscope.
   B Scope frequency measurement is the same with function generator output;
   C DMM #1 and #2 read measurement results should be around 3 mA ±1 mA under no load conditions. For more information about operating current, refer to the NCP51561 data sheet.

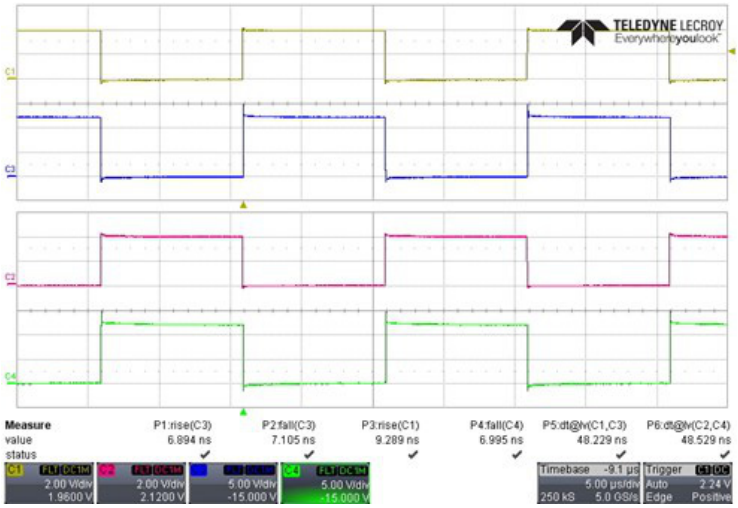

CH1: INA, CH2: INB, CH3: OUTA, and CH4: OUTB

Figure 3. Experimental Waveforms of Input to Output

Power Down

1. Disable function generator.
2. Disable power supply of V_{CCA}, and V_{CCB} in secondary−side.
3. Disable power supply of V_{DD} in primary−side.
4. Disconnect cables and probes.

Figure 4 and Figure 5 show the NCP51561 application schematic of each evaluation board to cope with various package types.

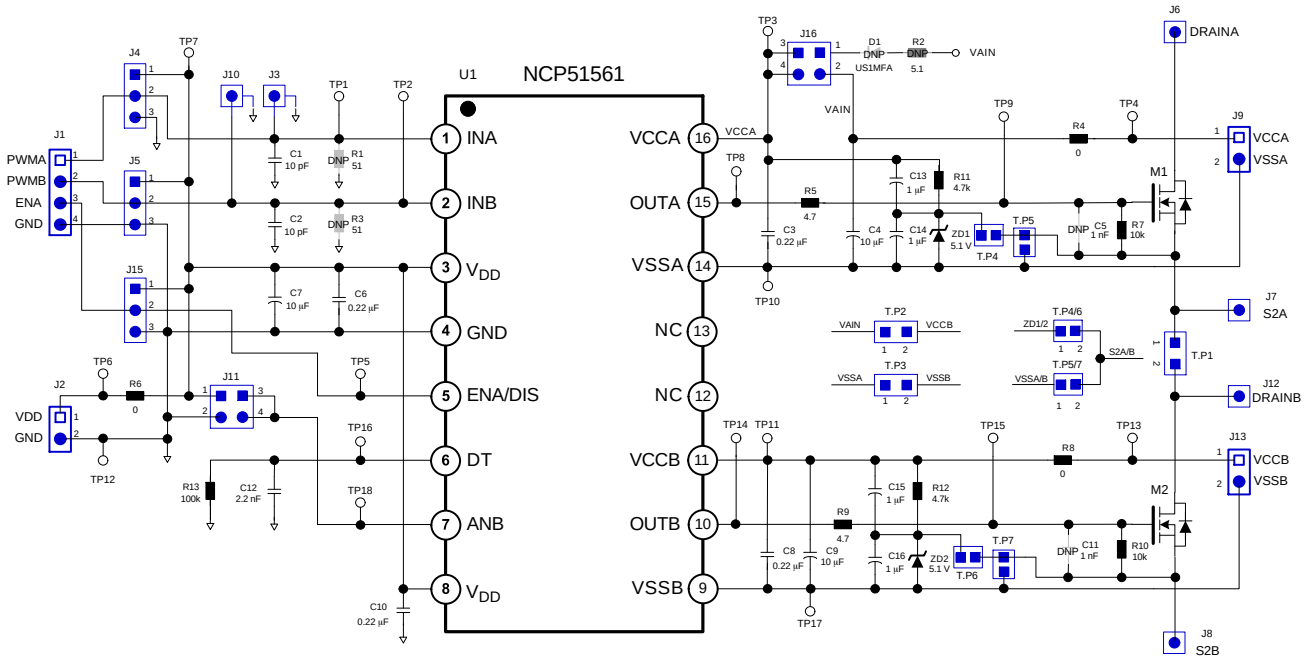

(A) Schematic of Type−A for TO−220, TO−247, and TO−263 (D2PAK) Package

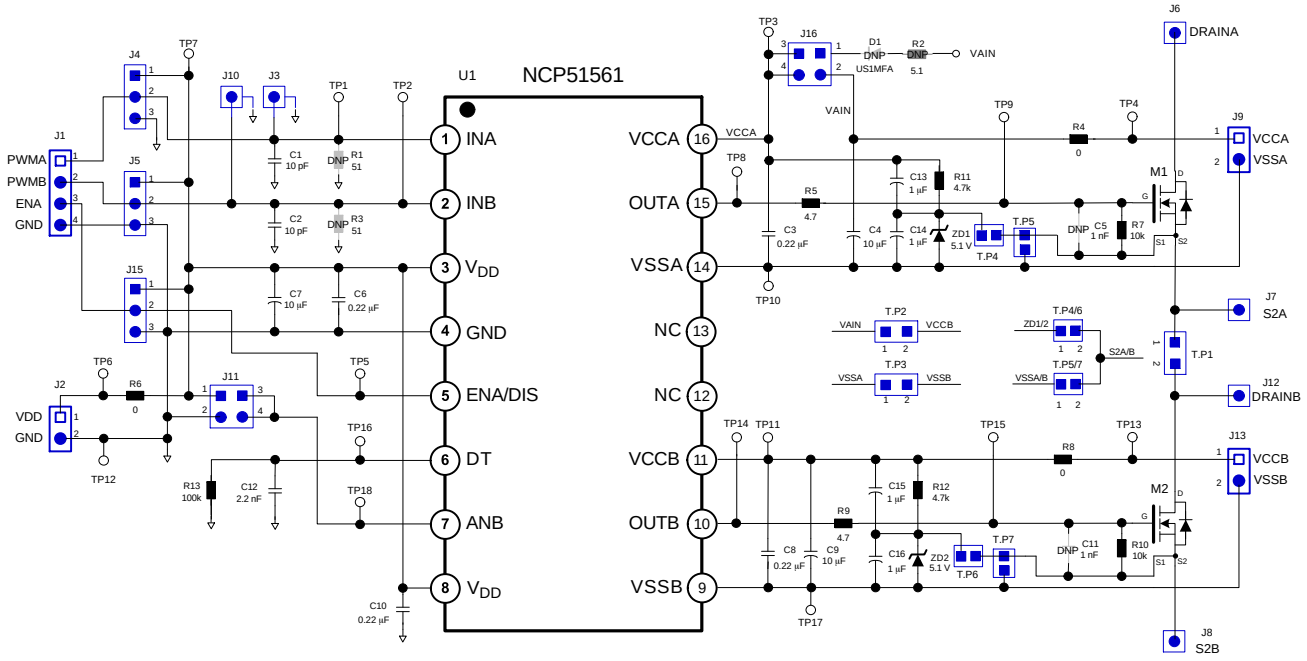

(B) Schematic of Type−B for TO−247−4L Package

Figure 4. Typical Application Schematic of NCP51561 EVB

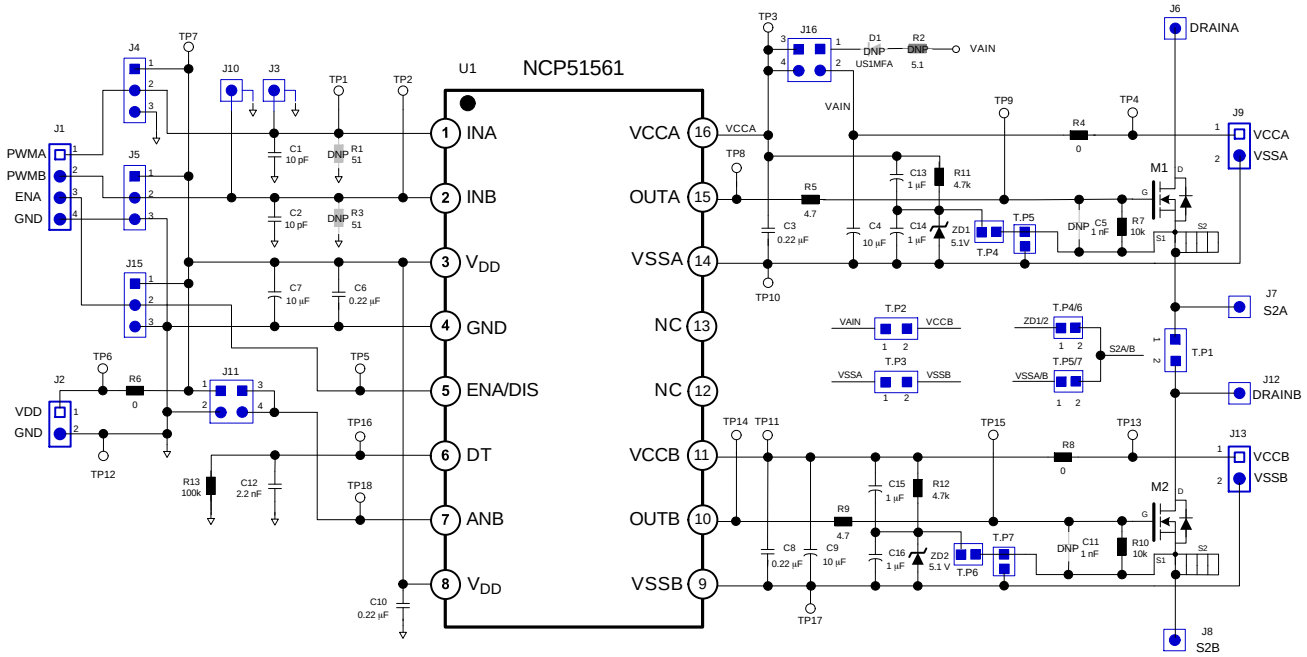

(C) Schematic of Type−C for D2PAK−7L Package

Figure 5. Typical Application Schematic of NCP51561 EVB

List of Test Point

Table 2 show the test point list of NCP51561 for an evaluation board.

Table 2. LIST OF TEST POINT

TP	Reference	Description
TP1	INA	Logic input for Channel A with internal pull−down resistor to GND.
TP2	INB	Logic input for Channel B with internal pull−down resistor to GND.
TP3	VCCA	Supply voltage for output Channel A.
TP4	VCCAIN	It is recommended to place a bypass capacitor from VCCA to VSSA.
TP5	ENA/DIS	Logic input High enables both output channels with Internal pull−up resistor for an ENABLE version. Conversely, Logic input High disables both output channels with internal pull−down resistor for the DISABLE version.
TP6	VDDIN	Input−side supply voltage.
TP7	VDD	It is recommended to place a bypass capacitor from VDD to GND.
TP8	OUTA	Output for Chanel A
TP9	VGA	
TP10	VSSA	Ground for Channel A
TP11	VCCB	Supply voltage for output Channel B. It is recommended to place a bypass capacitor from VCCB to VSSB.
TP12	GND	Ground Input−side. (all signals on input−side are referenced to this pin)
TP13	VCCBIN	Supply voltage for output Channel B.
TP14	OUTB	Output for Channel B
TP15	VGB	
TP16	DT	Input for programmable Dead−Time
TP17	VSSB	Ground for Channel B
TP18	ANB	It is recommended to tie this pin to GND or floating (not recommended) if the ANB pin is not used to achieve better noise immunity. The ANB pin has a typical 3.3 μs internal filter to improve noise immunity but we recommend to tie to GND, if the ANB pin is not used.

Electrical Specifications

Table 3 show the recommended operating conditions of NCP51561 for an evaluation board.

Table 3. ELECTRICAL SPECIFICATIONS

Rating		Symbol	Min	Max	Unit
Power Supply Voltage – Input side		VDD	3.0	5.0	V
Power Supply Voltage – Driver side	5−V UVLO Version	V_{CCA}, V_{CCB}	6.5	30	V
	8−V UVLO Version		9.5	30	V
	13−V UVLO Version		14.5	30	V
	17−V UVLO Version		18.5	30	V
Logic Input Voltage at pins INA, INB, and ANB		V_{IN}	0	18	V
Logic Input Voltage at pin ENA/DIS		V_{EN}	0	5.0	V
Operating Junction Temperature		Tj	−40	+125	°C

Bill of Material (BOM)

Table 4 show the bill of material (BOM) of NCP51561 for an evaluation board.

Table 4. BILL OF MATERIAL

Reference	Qty	Description	Value	Footprint	Manufacturer
U1	1	Gate Driver	NCP51561	16 SOIC−WB	**onsemi**
D1	0	Diode	US1MFA (DNP)	SMB/DO214AA	**onsemi**
ZD1, ZD2	2	Zenner DIode	5.1 V	SOD−123	
R1, R3	0	Resistor	51 Ω (DNP)	SMD 0805W	
R2	1	Resistor	5.1 Ω	SMD 0805W	
R4, R6, R8	3	Resistor	0 Ω	SMD 0805W	
R5, R9	2	Resistor	4.7 Ω	SMD 0805W	
R7, R10	2	Resistor	10 kΩ	SMD 0805W	
R11, R12	2	Resistor	4.7 kΩ	SMD 0805W	
R13	1	Resistor	100 kΩ	SMD 1206W	
C1, C2	2	Capacitor, Ceramic	10 pF, 50 V	SMD 0805W	
C3, C6, C8, C10	4	Capacitor, Ceramic	0.22 μF, 50 V	SMD 3216	
C4, C7, C9	3	Capacitor, Ceramic	10 μF, 50 V	SMD 3216	
C5, C11	0	Capacitor, Ceramic	1 nF, 50 V (DNP)	SMD 0805W	
C12	1	Capacitor, Ceramic	2.2 nF, 50 V	SMD 3216	
C13, C14, C15, C16	4	Capacitor, Ceramic	1 μF, 50 V	SMD 3216	
M1, M2	2	Switch	For Only Type−A	TO−220	
			For Only Type−B	TO−247−4L	
			For Only Type−C	D2PAK−7L	
J1	1	Connector		EB21A−04−D	
J2, J9, J13	3	Connector		EB21A−02−D	
J3, J10	2	BNC Connector		SMB	
J4, J5, J15	3	Header 3			
J11, J16	2	Header 2 x 2			
J6, J7, J8, J12	4	Connector			

Input Stage

The input pins of NCP51561 is based on a TTL compatible input−threshold logic that is independent of the V_{DD} supply voltage for INA, INB, ANB, and ENA/DIS pins.

The logic level compatible input provides a typically high threshold of 1.6 V and a typically low threshold of 1.1 V. The input impedance of the NCP51561 is 200 kΩ typically, as shown in Figure 6.

And we recommends an RC network is to be added on the PWM input pins, INA and INB, for reducing the impact of system noise and ground bounce, for example, 51 Ω (R1, and R3) with 10 pF (C1, and C2) is an acceptable choice as shown in Figure 6.

INA, INB, ENA/DIS and ANB signal can be monitored via TP1, TP2, TP5 and TP18, respectively.

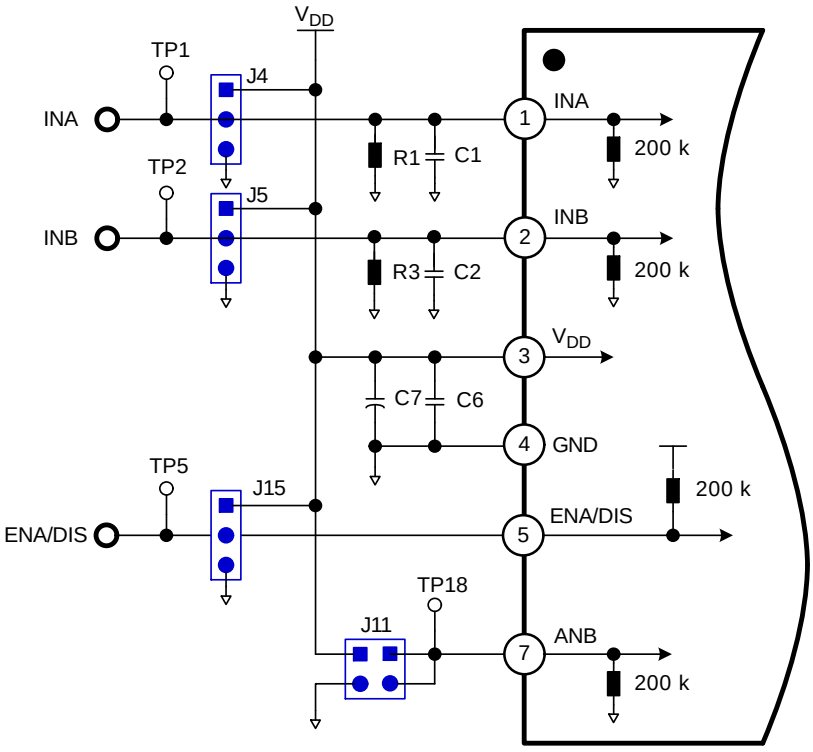

Figure 6. Recommended Input Circuit for an ENABLE Version

Output Stage

The output stage is able to sink/source typically around 4.5 A/9.0 A at 25°C for the NCP51561.

The EVB comes populated with a 1−nF load (C5, and C11) on the output side. The OUTA and OUTB can be monitored directly via TP8 and TP14, respectively.

The Type−A EVB allows for evaluation of the device with an MOSFET load in either of the standard TO−220, TO−3P, TO−247, and TO−252 (D−PAK), and TO−263 (D2PAK) footprints. The Type−B EVB allows for evaluation of the device with an MOSFET load in the standard TO−247−4L.

The Type−C EVB allows for evaluation of the device with an MOSFET load in the standard D2PAK−7L. During evaluation with an MOSFET and SiC MOSFET load, the pre−installed capacitive load (C5 and C11) can be disconnected from the each output.

The EVB provides an additional connection (J6) for applying an external power supply to the MOSFET Drain. The EVB is not intended for high voltage testing and the voltage applied to J6 should be limited to 50−V_{DC}.

PERFORMANCE OF EVALUATION BOARD

This section describes application guidance and operation of the NCP51561 for an evaluation board (EVB) include key functions.

Input Signal Configuration

The NCP51561 allows changing the input signal pin configuration by the ANB pin for user convenience. (e.g. single input – dual output, or dual input – dual output).

ANB Function

The NCP51561 allows changing the input signal pin configuration by the ANB pin for user convenience. There are two operating modes that allow changing the configuration of the input to output channels (e.g. single input – dual output, or dual input – dual output).

Figure 7 and Figure 8 show the experimental result of ANB function with and without dead−time control.

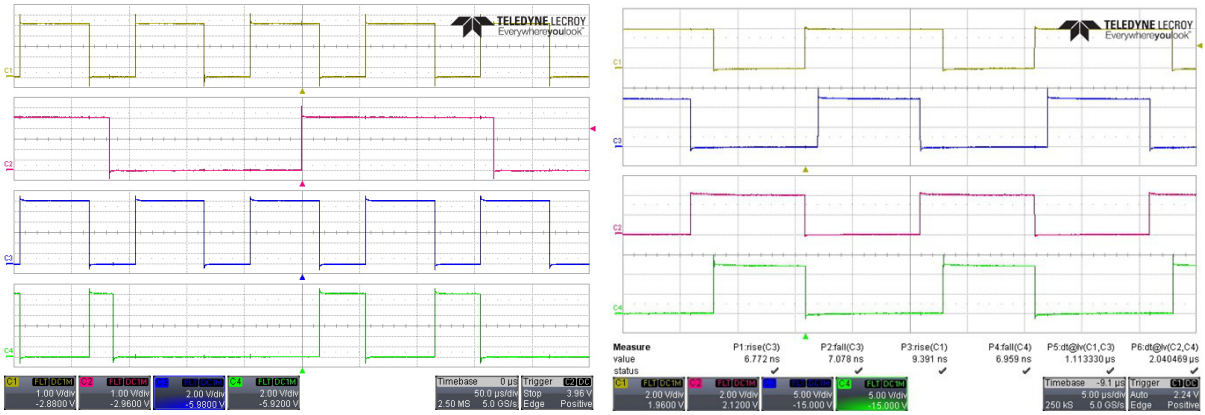

(a) INB = OPEN (LOW) with DT = Open

(b) INB = OPEN (LOW) with R_{DT} = 100 kΩ

CH1: INA, CH2: ANB, CH3: OUTA, and CH4: OUTB

Figure 7. Experimental Waveforms of ANB Function with Dead−Time

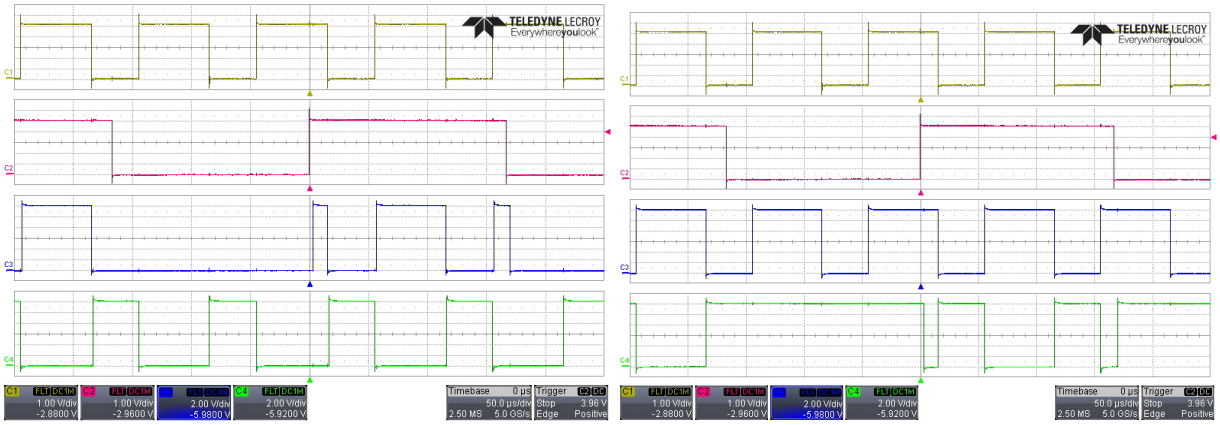

(a) INB = HIGH with DT = Open

(b) INB = HIGH with DT = VDD

CH1: INA, CH2: ANB, CH3: OUTA, and CH4: OUTB

Figure 8. Experimental Waveforms of ANB Function

Protection Function

NCP51561 provide the protection features include Enable or Disable function, and Under−Voltage Lockout (UVLO) of power supplies in primary−side (V_{DD}), and secondary−side both channels (V_{CCA}, and V_{CCB}).

ENABLE and DISABLE Function

Figure 9 shows the timing chart of ENABLE and DISABLE function. (e.g. NCP51561xA or NCP51561xB version).

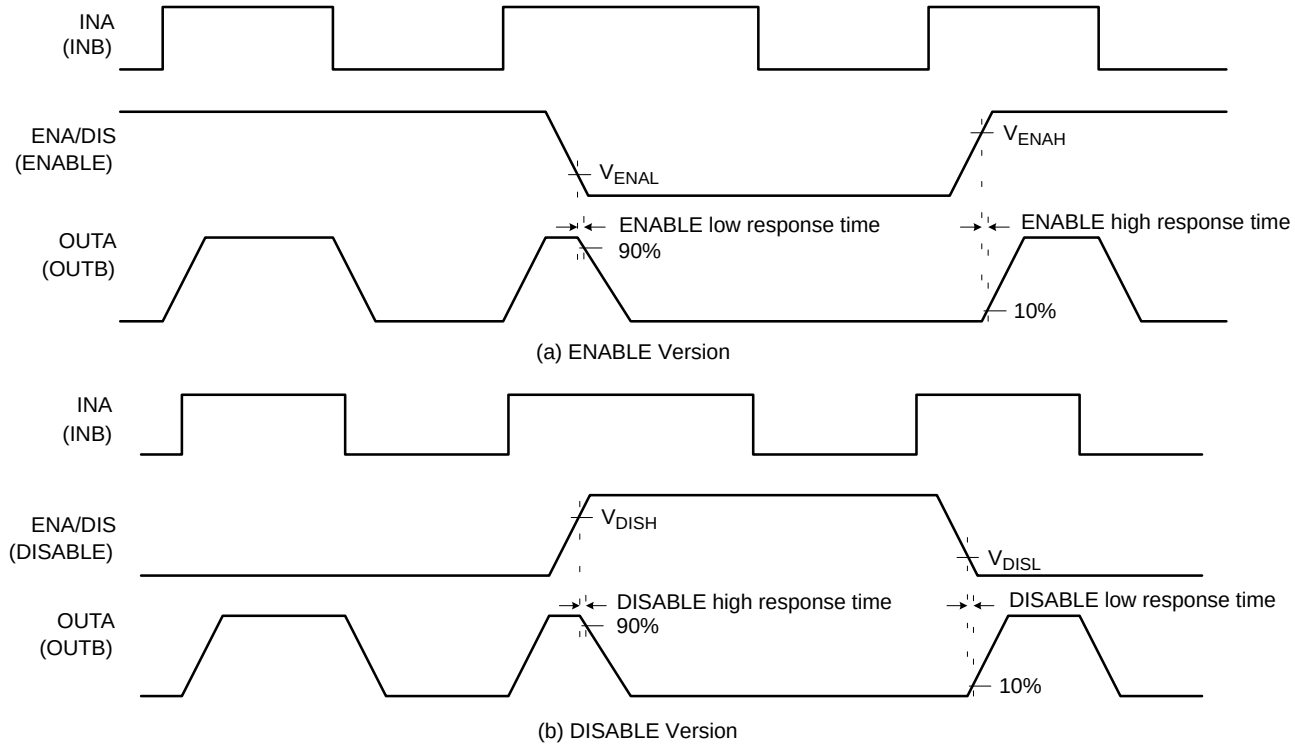

Figure 9. Timing Chart of ENABLE and DISABLE

Figure 10 shows an experimental result of enable function that the ENA/DIS pin voltage goes to LOW state in normal operation, the both driver output is turned−off immediately even though input signals, INA and INB, are HIGH state.

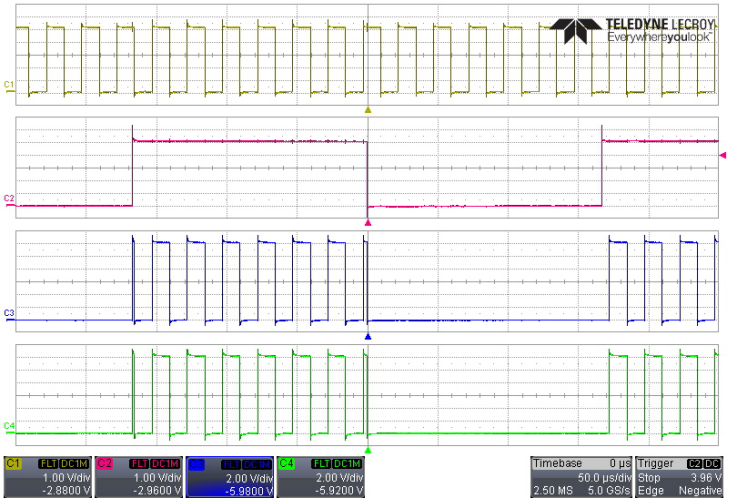

CH1: INA and INB, CH2: ENABLE, CH3: OUTA, and CH4: OUTB

Figure 10. Experimental Waveforms of Enable Function

Under−Voltage Lockout Protection V_{DD}

The NCP51561 provides the Under−Voltage Lockout (UVLO) protection function for V_{DD} in primary−side as shown in Figure 11. The OUTA and OUTB as complementary outputs from one PWM input signal on the INA pin regardless the INB signal when the ANB pin is high. As test result, the V_{DD} UVLO turn−on and off threshold voltages are around 2.8 V and 2.7 V respectively.

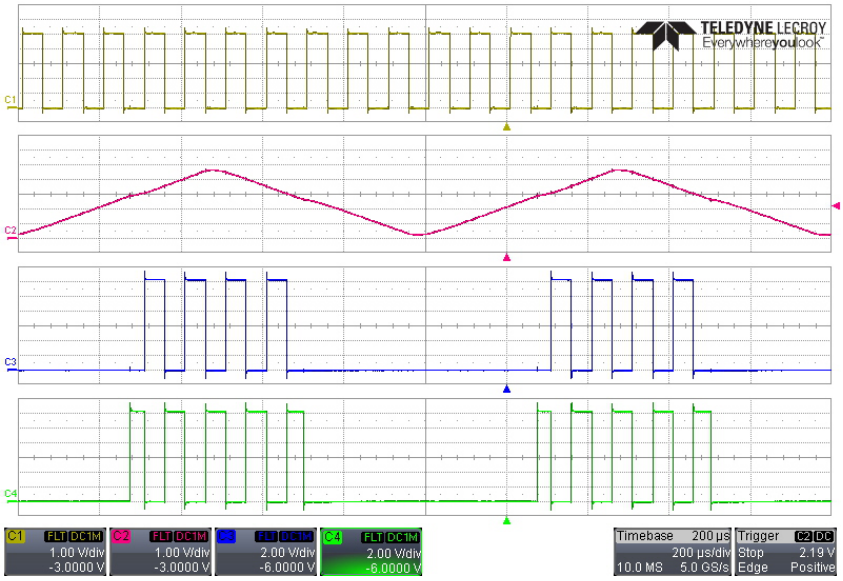

CH1: INA, CH2: VDD, CH3: OUTA, and CH4: OUTB

Figure 11. Experimental Waveforms of VDD Under−Voltage Lockout Protection

Under−Voltage Lockout Protection VCCx (VCCA and VCCB)

The NCP51561 provides the Under−Voltage Lockout (UVLO) protection function for both gate drive output for V_{CCA} and V_{CCB} for 5−V version in secondary−side as shown in Figure 12. The OUTA and OUTB as complementary outputs from one PWM input signal on the INA pin regardless the INB signal when the ANB pin is high. As test result, the V_{CCX} UVLO turn−on and off threshold voltages are around 6.0 V and 5.7 V respectively.

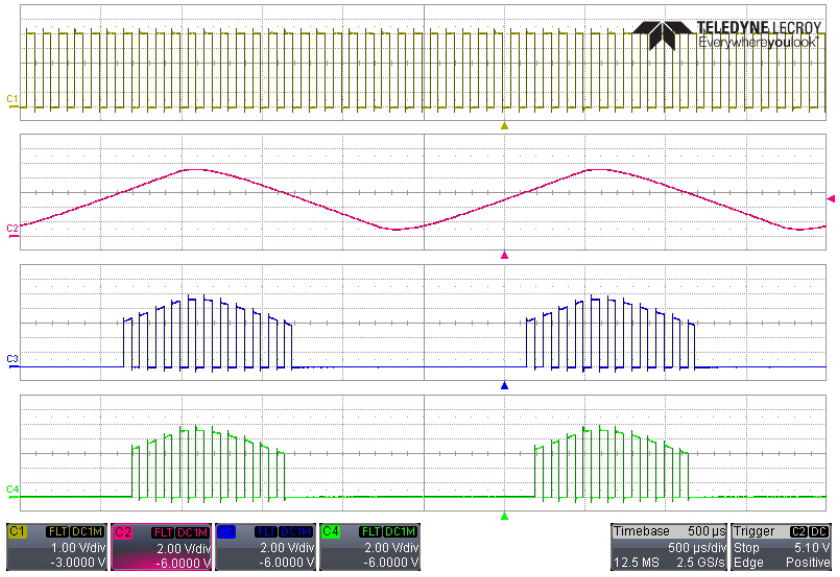

CH1: INA, CH2: VCCA, and VCCB, CH3: OUTA, and CH4: OUTB

Figure 12. Experimental Waveforms of VCC Under−Voltage Lockout Protection

Experimental Waveforms with Different Dead−Time Configurations

This section shows experimental test results of dead−time control with different dead−time (DT) configuration.

DT Pin Floating or Left Open (R13 and C12 are Open)

The dead−time(DT) between the outputs (OUTA and OUTB) of the two channels is typically around 10 ns, which is preset for shoot−through prevention as shown in Figure 13.

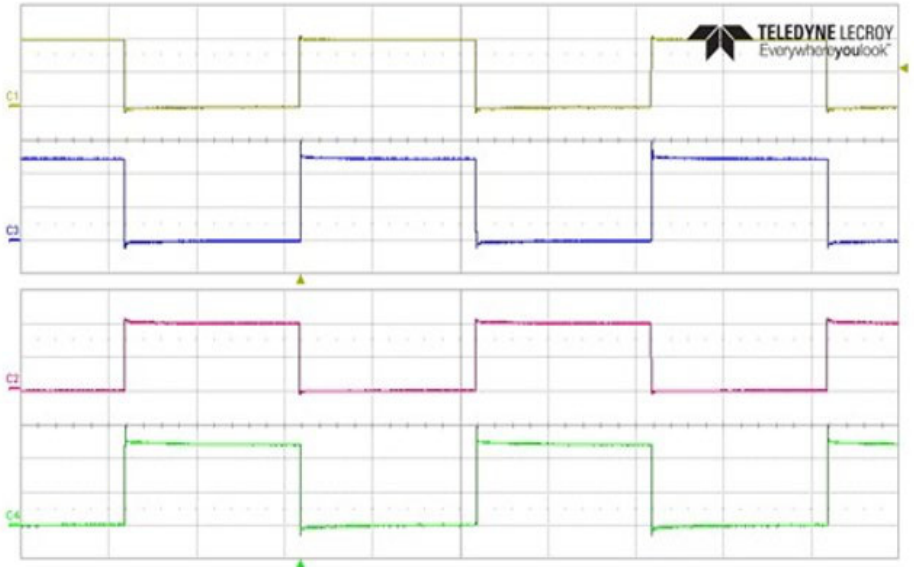

CH1: INA, CH2: INB, CH3: OUTA, and CH4: OUTB

Figure 13. Experimental Waveforms if DT is Left Open

DT Pin Connected to V_{DD}

Overlap is allowed both switches from conducting even though at the same time when the DT pin pulled to V_{DD} as shown in Figure 14.

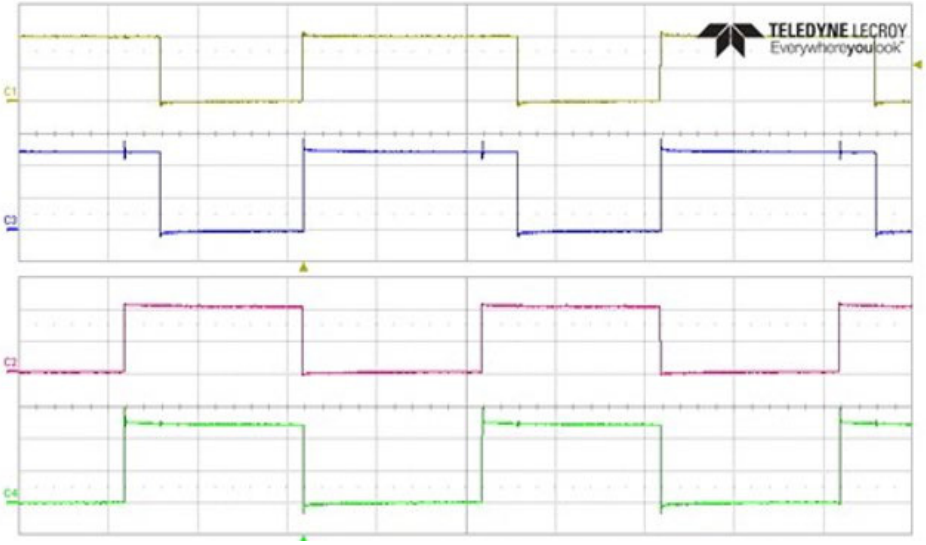

CH1: INA, CH2: INB, CH3: OUTA, and CH4: OUTB

Figure 14. Overlap is Allowed when DT Connected to VDD

DT Pin Connected to R_{DT}

Overlap is not allowed both switches at the same time when the dead time (DT) control mode. The dead−time (DT) between both outputs is set according to:
DT (in ns) = 10 x R_{DT} (in kΩ).

Figure 15 shown the experimental results when the dead−time control resistance for 100 kΩ.

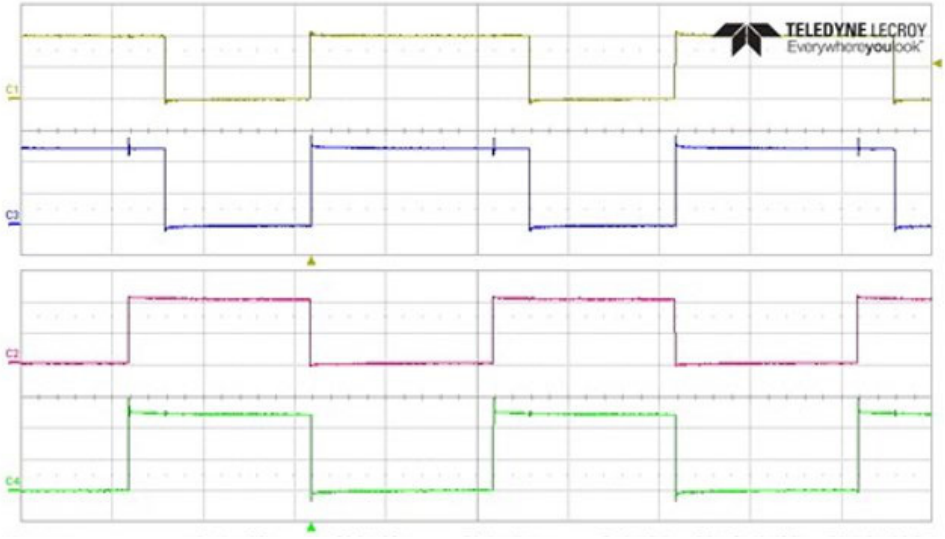

CH1: INA, CH2: INB, CH3: OUTA, and CH4: OUTB

Figure 15. Experimental Waveforms if DT Connected to R_{DT}

Dead Time Characteristics

Figure 16 shows the dead time characteristics and operating modes according to the dead−time resistance values of the NCP51561.

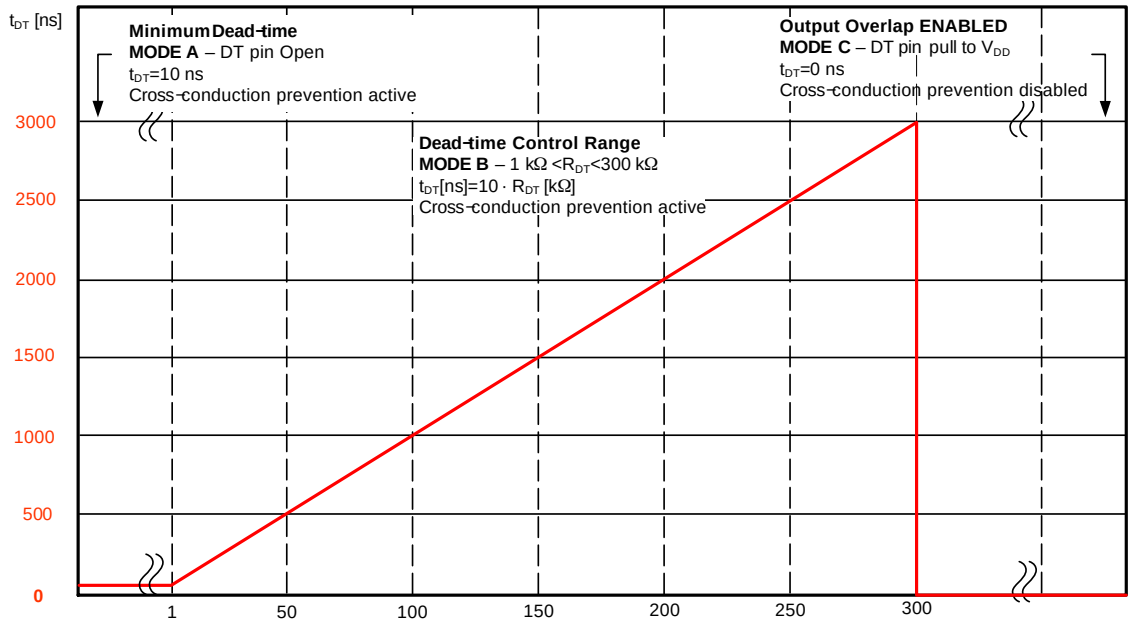

Figure 16. Dead Time (DT vs. R_{DT})

Select the Type of Output Drive

There are many similarities between SiC MOSFETs and Si MOSFETs. However, some of the challenges faced by the designers of SiC MOSFETs is the control of the gate threshold voltage. The SiC MOSFETs require a higher positive gate drive voltage (+20 V) and, depending on the application, a negative OFF gate voltage in the −2 V to −6 V range because it exhibits lower Vgs threshold that could lead to unwanted Turn−ON of the SiC MOSFET. Below is an examples of implementing negative gate drive bias with negative bias turn−off on the gate driver using a Zener diode on an isolated power supply (e.g. ZD1 and ZD2) as shown in Figure 17.

Can be selected the type of output drive for the unipolar or negative bias as follows:

A Should be connect switches (M1 and M2) source pins (S2A, and S2B) to ZD1 and ZD2 pin through a wire−bridge between pin 1 and pin 2 of T.P4 and T.P6 respectively, if the use the negative gate drive bias.

B Should be connect switches (M1 and M2) source pins (S2A, and S2B) to VSSA and VSSB pins through a wire−bridge between pin 1 and pin 2 of T.P5 and T.P7 respectively, if the use the unipolar gate driving. (Default)

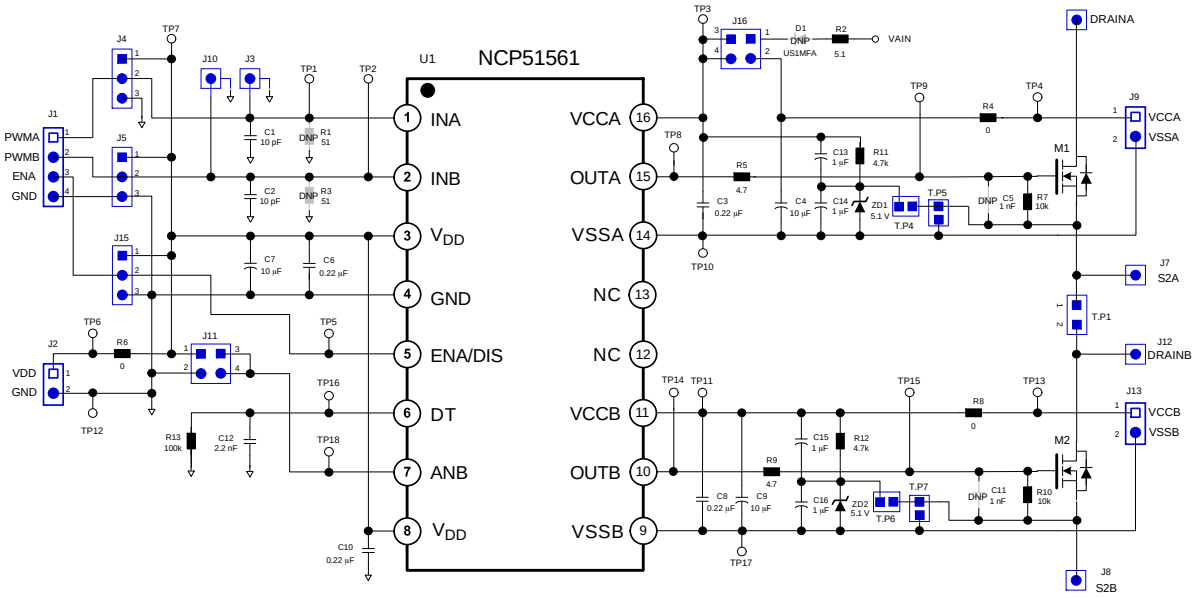

Figure 17. Application Schematic of Negative Bias with Zener Diode on Iso−Bias Power Supply Output

Figure 18 shows the experimental result of unipolar and bipolar driving output with negative bias gate driving respectively. The examples were design to have a +15 V and −5.1 V drive power supply referenced to the device source by using the 20 V isolated power supply.

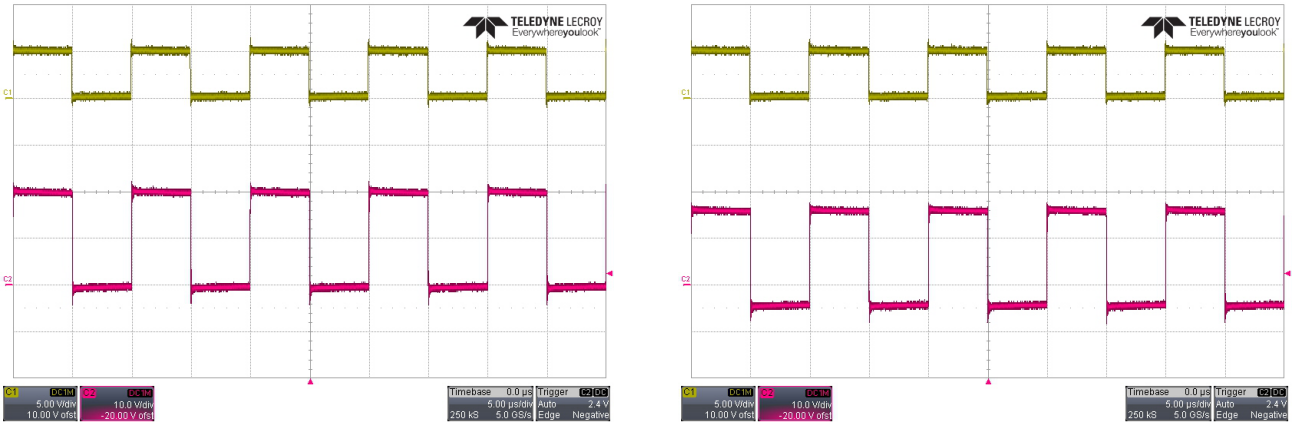

(a) Unipolar Gate Driving Output (b) Negative Bias Gate Driving Output

CH1: INPUT Signal, and CH2: OUTPUT

Figure 18. Experimental Waveforms of Output Driving Voltage

Output Driving Current Capability

Figure 19 shows the experimental result of source and sink peak currents driving capability around 4.0 A and 10 A respectively at 25°C when the supply voltage (VCCA and VCCB) is applied 12 V.

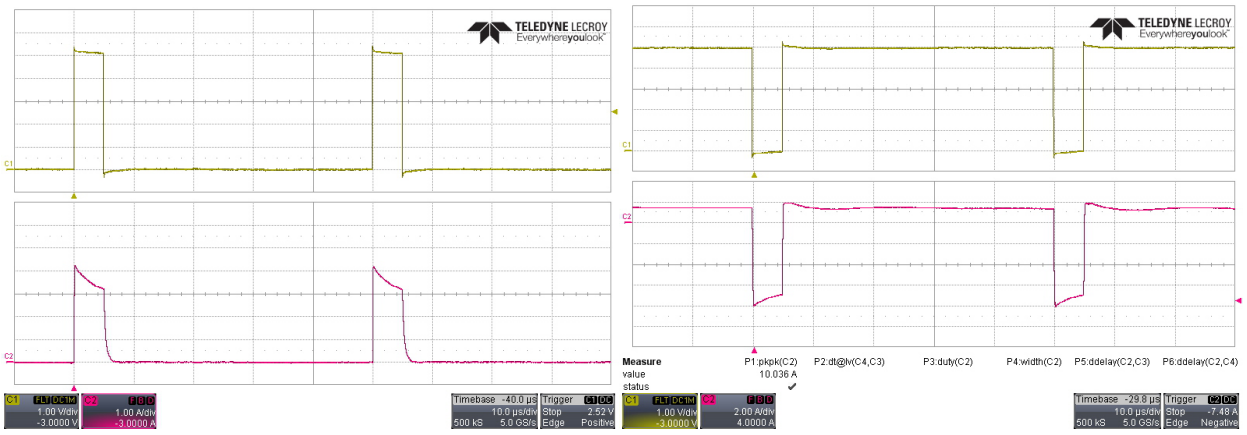

(a) Source Current Capability (b) Sink Current Capability

CH1: INPUT, and CH2: OUTPUT Current

Figure 19. Experimental Waveforms of Current Driving Voltage

ESD Structure

Figure 20 shows the multiple diodes related to an ESD protection components of NCP51561. This illustrates the absolute maximum rating for the device.

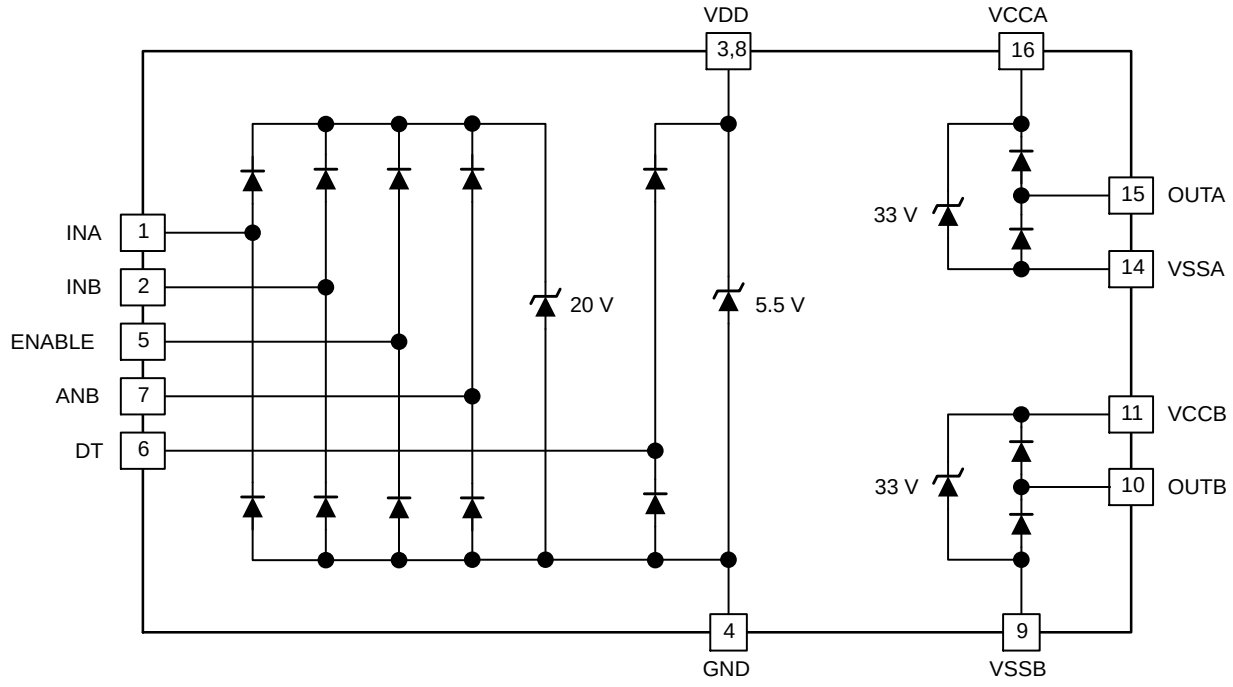

Figure 20. ESD Structure

Printed Circuit Board

Figure 21 shows the photograph of the NCP51561 evaluation board for the Type−A. This EVB allows for evaluation of the device with an MOSFET and SiC MOSFET load in either of the standard TO−220, TO−3P, TO−247, and TO−252 (D−PAK), and TO−263 (D2PAK) footprints.

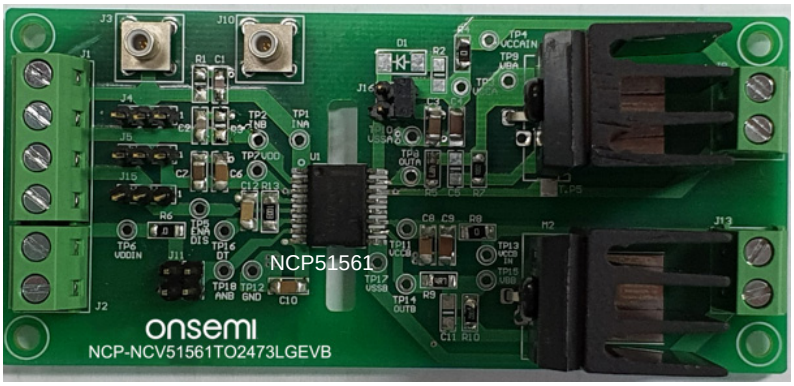

Figure 21. Evaluation Board Picture of Type−A (Top View)

Figure 22 shows the printed circuit board layout of NCP51561 evaluation board for the Type−A.

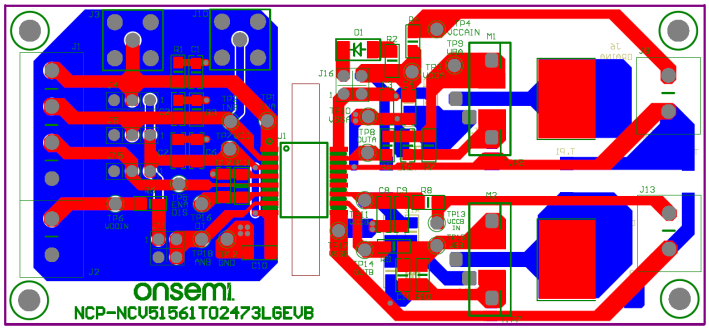

(A) Top & Bottom View

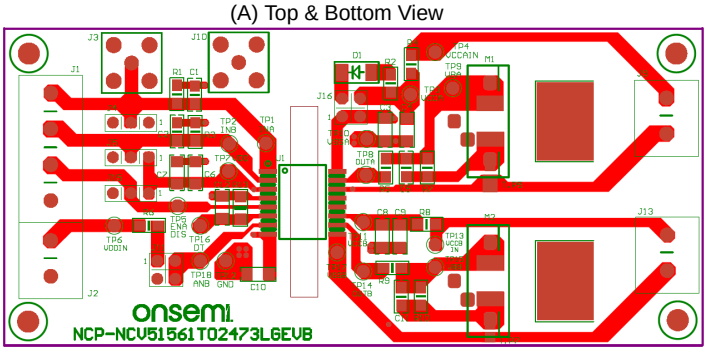

(B) Top View

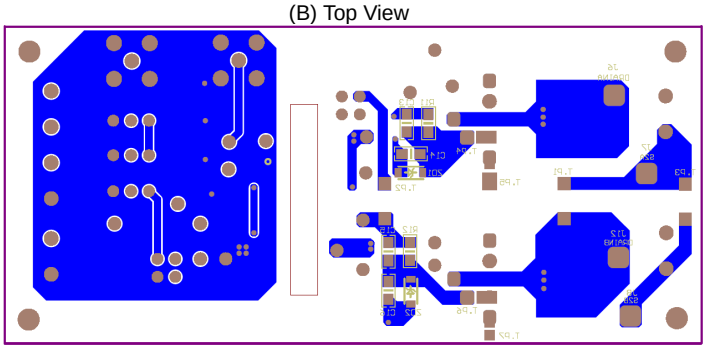

(C) Bottom View

Figure 22. Printed Circuit Board of Type−A

Figure 23 shows the photograph of the NCP51561 evaluation board for the Type−B. This EVB allows for evaluation of the device with an MOSFET and SiC MOSFET load in the standard TO−247−4L footprint.

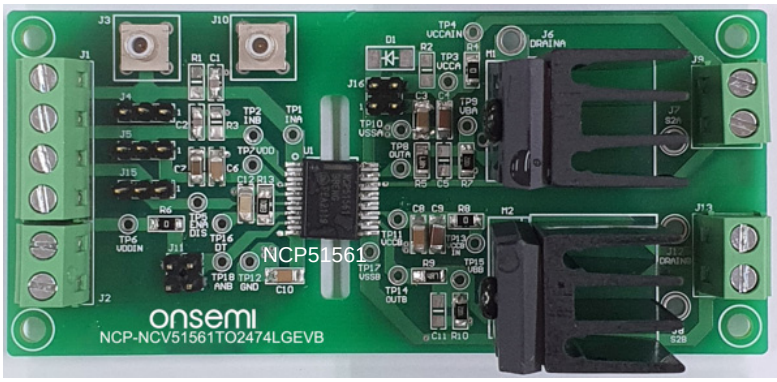

Figure 23. Evaluation Board Picture of Type−B (Top View)

Figure 24 shows the printed circuit board layout of NCP51561 evaluation board for the Type−B.

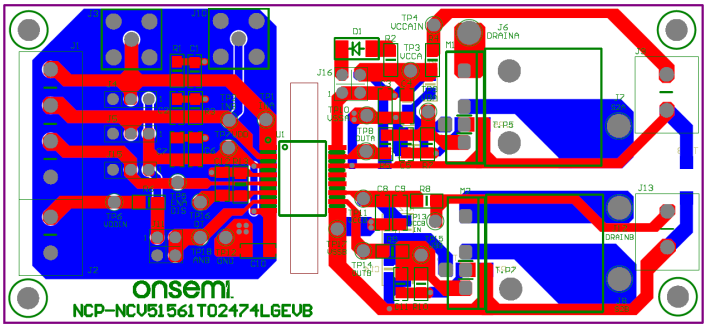

(A) Top & Bottom View

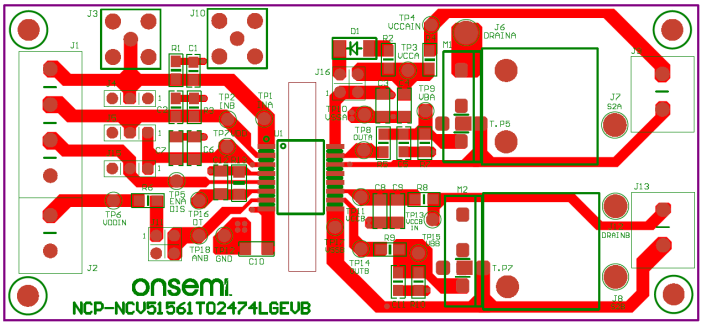

(B) Top View

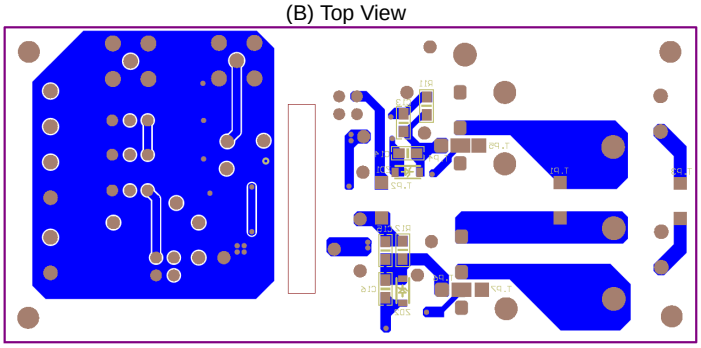

(C) Bottom View

Figure 24. Printed Circuit Board of Type−B

Figure 25 shows the photograph of the NCP51561 evaluation board board for the Type−C. This EVB allows for evaluation of the device with an MOSFET and SiC MOSFET load in the standard D2PAK−7L footprint.

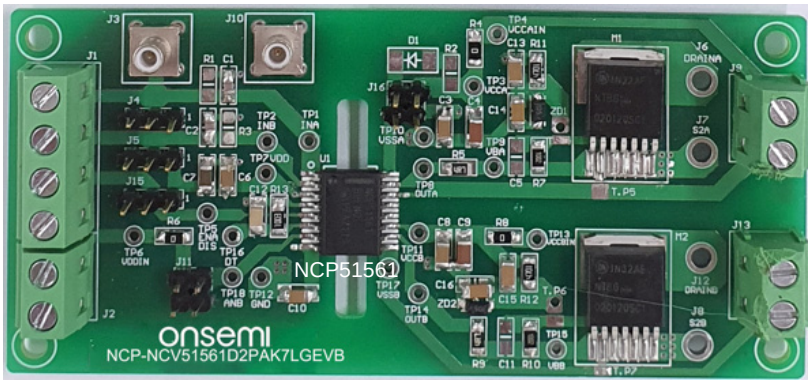

Figure 25. Evaluation Board Picture of Type−C (Top View)

Figure 26 shows the printed circuit board layout of NCP51561 evaluation board for the Type−C.

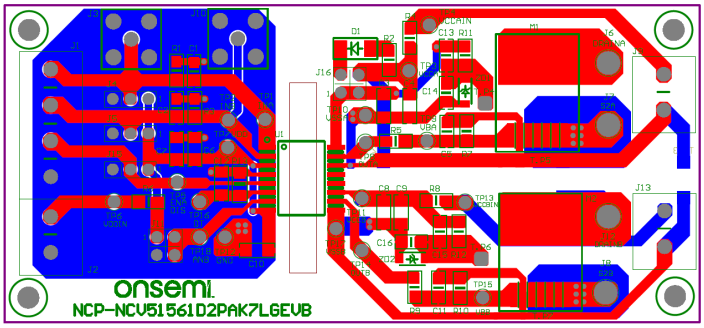

(A) Top & Bottom View

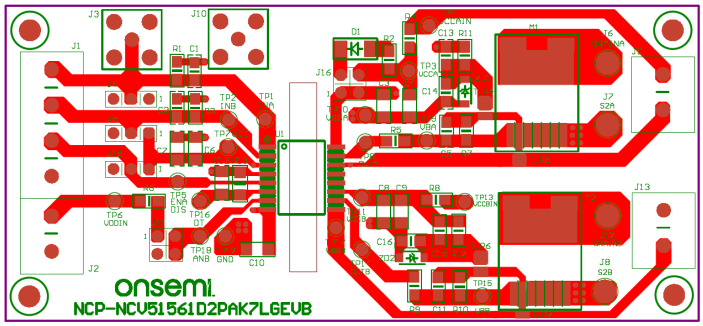

(B) Top View

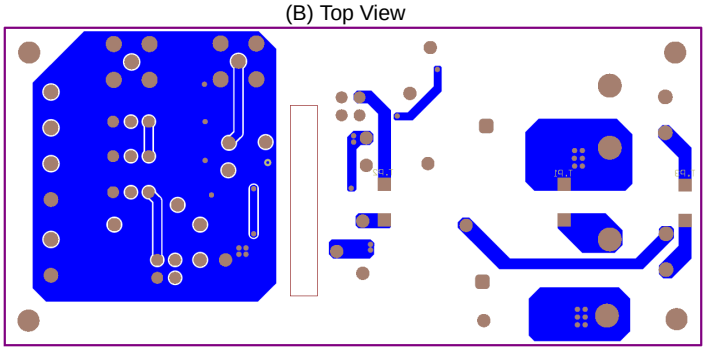

(C) Bottom View

Figure 26. Printed Circuit Board of Type−C

Related Product Information

[1] Datasheet of NCP51561/D available on **onsemi** website
[2] Datasheet of NCV51561/D available on **onsemi** website
[3] Datasheet of NCP51560/D available on **onsemi** website
[4] Datasheet of NCP51563/D available on **onsemi** website
[5] Datasheet of NCV51563/D available on **onsemi** website

onsemi, ONSEMI, and other names, marks, and brands are registered and/or common law trademarks of Semiconductor Components Industries, LLC dba "**onsemi**" or its affiliates and/or subsidiaries in the United States and/or other countries. **onsemi** owns the rights to a number of patents, trademarks, copyrights, trade secrets, and other intellectual property. A listing of **onsemi**'s product/patent coverage may be accessed at www.onsemi.com/site/pdf/Patent−Marking.pdf. **onsemi** is an Equal Opportunity/Affirmative Action Employer. This literature is subject to all applicable copyright laws and is not for resale in any manner.

The evaluation board/kit (research and development board/kit) (hereinafter the "board") is not a finished product and is not available for sale to consumers. The board is only intended for research, development, demonstration and evaluation purposes and will only be used in laboratory/development areas by persons with an engineering/technical training and familiar with the risks associated with handling electrical/mechanical components, systems and subsystems. This person assumes full responsibility/liability for proper and safe handling. Any other use, resale or redistribution for any other purpose is strictly prohibited.

THE BOARD IS PROVIDED BY ONSEMI TO YOU "AS IS" AND WITHOUT ANY REPRESENTATIONS OR WARRANTIES WHATSOEVER. WITHOUT LIMITING THE FOREGOING, ONSEMI (AND ITS LICENSORS/SUPPLIERS) HEREBY DISCLAIMS ANY AND ALL REPRESENTATIONS AND WARRANTIES IN RELATION TO THE BOARD, ANY MODIFICATIONS, OR THIS AGREEMENT, WHETHER EXPRESS, IMPLIED, STATUTORY OR OTHERWISE, INCLUDING WITHOUT LIMITATION ANY AND ALL REPRESENTATIONS AND WARRANTIES OF MERCHANTABILITY, FITNESS FOR A PARTICULAR PURPOSE, TITLE, NON−INFRINGEMENT, AND THOSE ARISING FROM A COURSE OF DEALING, TRADE USAGE, TRADE CUSTOM OR TRADE PRACTICE.

onsemi reserves the right to make changes without further notice to any board.

You are responsible for determining whether the board will be suitable for your intended use or application or will achieve your intended results. Prior to using or distributing any systems that have been evaluated, designed or tested using the board, you agree to test and validate your design to confirm the functionality for your application. Any technical, applications or design information or advice, quality characterization, reliability data or other services provided by **onsemi** shall not constitute any representation or warranty by **onsemi**, and no additional obligations or liabilities shall arise from **onsemi** having provided such information or services.

onsemi products including the boards are not designed, intended, or authorized for use in life support systems, or any FDA Class 3 medical devices or medical devices with a similar or equivalent classification in a foreign jurisdiction, or any devices intended for implantation in the human body. You agree to indemnify, defend and hold harmless **onsemi**, its directors, officers, employees, representatives, agents, subsidiaries, affiliates, distributors, and assigns, against any and all liabilities, losses, costs, damages, judgments, and expenses, arising out of any claim, demand, investigation, lawsuit, regulatory action or cause of action arising out of or associated with any unauthorized use, even if such claim alleges that **onsemi** was negligent regarding the design or manufacture of any products and/or the board.

This evaluation board/kit does not fall within the scope of the European Union directives regarding electromagnetic compatibility, restricted substances (RoHS), recycling (WEEE), FCC, CE or UL, and may not meet the technical requirements of these or other related directives.

FCC WARNING − This evaluation board/kit is intended for use for engineering development, demonstration, or evaluation purposes only and is not considered by **onsemi** to be a finished end product fit for general consumer use. It may generate, use, or radiate radio frequency energy and has not been tested for compliance with the limits of computing devices pursuant to part 15 of FCC rules, which are designed to provide reasonable protection against radio frequency interference. Operation of this equipment may cause interference with radio communications, in which case the user shall be responsible, at its expense, to take whatever measures may be required to correct this interference.

onsemi does not convey any license under its patent rights nor the rights of others.

LIMITATIONS OF LIABILITY: **onsemi** shall not be liable for any special, consequential, incidental, indirect or punitive damages, including, but not limited to the costs of requalification, delay, loss of profits or goodwill, arising out of or in connection with the board, even if **onsemi** is advised of the possibility of such damages. In no event shall **onsemi**'s aggregate liability from any obligation arising out of or in connection with the board, under any theory of liability, exceed the purchase price paid for the board, if any.

The board is provided to you subject to the license and other terms per **onsemi**'s standard terms and conditions of sale. For more information and documentation, please visit www.onsemi.com.

ADDITIONAL INFORMATION

TECHNICAL PUBLICATIONS:
Technical Library: www.onsemi.com/design/resources/technical−documentation
onsemi Website: www.onsemi.com

ONLINE SUPPORT: www.onsemi.com/support
For additional information, please contact your local Sales Representative at www.onsemi.com/support/sales