TABLE OF CONTENTS	
SHEET NO.	SHEET DESCRIPTION
1	NOTES AND BOM
2	CONFIGURATIONS
3	ADAPTOR DETAIL

BILL OF MATERIALS (BOM)

DESCRIPTION	PART NUMBER	CIRCUIT SIZE	COLOR	RIBS	MATING DRAWING	CONVOLUTE SIZE	STATUS
1X3 C.S., WITH RIB	204351-0304	1X3 C.S.	BLACK	YES	2043510301 PSD	AD 10 SOFANOU VARIANT 1	SALEABLE
2X4, WITH RIB	34951-0831	2X4	BLACK	YES	SD-34951-0001 SD-34950-0001	NW 12 SCHLEMMER	SALEABLE
2X4, WITHOUT RIB	34951-0841	2X4	BLACK	NO	SD-34951-0001 SD-34950-0001	NW 12 SCHLEMMER	SALEABLE
2X8/2X10, WITH RIB	34951-1631	2X8/2X10	BLACK	YES	SD-34951-0001 SD-34950-0001	NW 16 SCHLEMMER	SALEABLE
2X8/2X10, WITHOUT RIB	34951-1641	2X8/2X10	BLACK	NO	SD-34951-0001 SD-34950-0001	NW 16 SCHLEMMER	SALEABLE

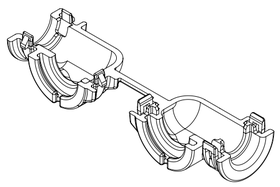

1X3 C.S.

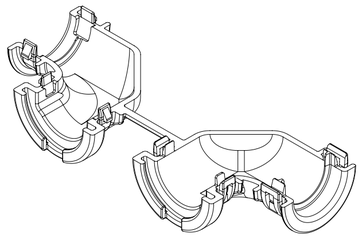

2X4

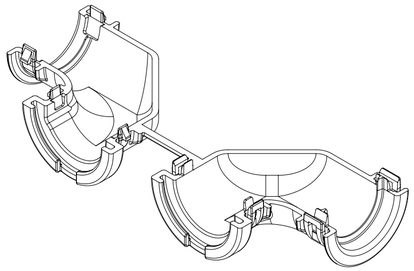

2X8/2X10

ADAPTOR NOTES: VALID UNLESS OTHERWISE SPECIFIED

1. GENERAL:
a. APPLICATION SPECIFICATION SEE: 1600730001-AS REV C
-DESIGNED TO MATE WITH BACKSHELL AS SPECIFIED IN THE BOM
-COMPONENTS ARE OPTIONAL AND MUST BE PURCHASED SEPERATELY. SEE GM DRAWING 13109960 REV 006 FOR CONDUIT SPECIFICATIONS
b. PRODUCT SPECIFICATION: TBD
c. PACKAGING SPECIFICATION SEE: TBD
d. PARTS MUST BE IN COMPLIANCE TO MOLEX CHEMICAL SUBSTANCES FOR PRODUCTS AND PACKAGING SPECIFICATION: QEHS-699000-300
e. DATA MUST BE SUBMITTED UNDER THE MOLEX PART NUMBER TO IMDS (COMPANY ID#13255)
f. FOLLOWING PRODUCTION CODES TO BE PRESENT
-DATE CODE
-MOLD CAVITY CODE
-MOLEX LOGO
-RECYCLE CODE

2. DESIGN - MATERIALS:
a. PA66 0% GLASS FILLED
b. BLACK

3. DESIGN GEOMETRY:
a. THIS IS A 100% CAD GENERATED PART. THE CAD MATHEMATICAL DATA IS THE MASTER FOR THIS PART. FOR DIMENSIONAL OR ANY INFORMATION NOT SHOWN ON THIS DRAWING, ANALYZE THE CAD MODEL.
b. GEOMETRIC DIMENSIONS AND TOLERANCES PER ASME Y14.5M - 2009.
c. CORNERS SHOWN AS SHARP TO BE R 0.1.
d. VISUAL DEFECTS SHALL MEET COSMETIC STANDARD PS-45499-002 (CLASS B).
e. VISUAL DEFECTS SHALL MEET COSMETIC STANDARD PS-45499-002 (CLASS C) FOR SPECIFIED AREAS ON THE ADAPTOR.
f. ALLOWABLE FLASH, PARTING LINES MISMATCH, EJECTOR PINS MARK, AND GATE VESTIGE TO BE +0.30 MAX PROTUSION.

INSPECTION NUMBER LOG
LAST NUMBER: 53 ADDED: 41,51,43,53,45,48,27,28,14,25, 17,19,15,27 REMOVED: 1,2,3,4,5,43,53

REV	DESCRIPTION
A10	CHANGED TOLERANCE ON DIM C FROM 0.12 TO 0.10 TO MATCH PDD
A9	CHANGED PARTS STATUS TO SALEABLE
A8	UPDATED RIB FEATURES AND CONTROLS
A7	UPDATE TOLERANCES FOR MANUFACTURING
A6	UPDATE TOLERANCES FOR MANUFACTURING
A5	UPDATE REV DESCRIPTION TABLE
A4	UPDATE NOTE 1.a FOR CONDUIT DEFINITION
A3	RELEASE P/N 204351-0304 FOR SALEABLE
A2	UPDATED CHARTS AND BALLOON NUMBERS
A1	MODIFIED SETTING IN PLM
A	DRAWING RELEASE

THIS DRAWING CONTAINS INFORMATION THAT IS PROPRIETARY TO MOLEX ELECTRONIC TECHNOLOGIES, LLC AND SHOULD NOT BE USED WITHOUT WRITTEN PERMISSION

EC NO: 632862
DRWN: PPALLAN 2020/02/25
CHK'D: MVANSLAMBROU 2020/02/26
APPR: MVANSLAMBROU 2020/02/26
REV: A10

GENERAL TOLERANCES (UNLESS SPECIFIED)

ANGULAR TOL ±	°	
4 PLACES	±	
3 PLACES	±	
2 PLACES	±	0.1
1 PLACE	±	0.2
0 PLACES	±	

DRAFT WHERE APPLICABLE MUST REMAIN WITHIN DIMENSIONS

DIMENSION UNITS: mm
SCALE: 1:1
DRWN BY: DDEB DATE: 2017/12/08
CHK'D BY: DATE:
APPR BY: MVANSLAMBROU DATE: 2017/12/20
DRAWING SIZE: A2
THIRD ANGLE PROJECTION

molex®

MX150 90° ADAPTOR

PRODUCT CUSTOMER DRAWING

SERIES	MATERIAL NUMBER	CUSTOMER
34951		

DOCUMENT NUMBER	DOC TYPE	DOC PART	SHEET NUMBER
349510001	PSD	000	1 OF 4

RELEASE STATUS	P1	RELEASE DATE	2020/02/26 00:51:12

FORMAT: master-tb-prod-A2
REVISION: G
DATE: 2017/02/06

SHEET DESCRIPTION
CONFIGURATIONS

WITH RIB	WITHOUT RIB
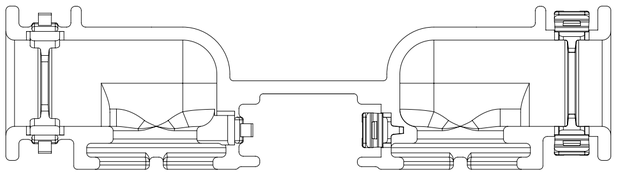 1X3 C.S.	
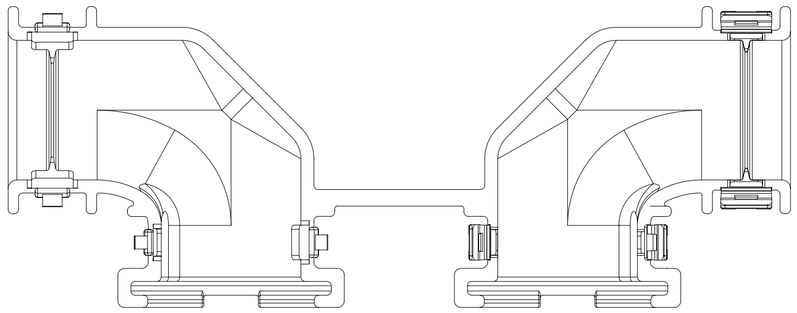 2X4	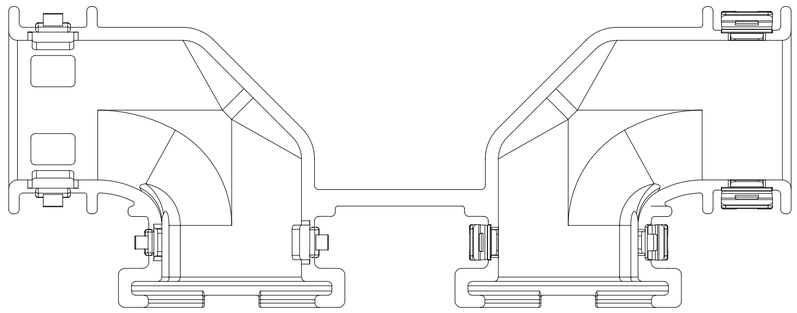 2X4
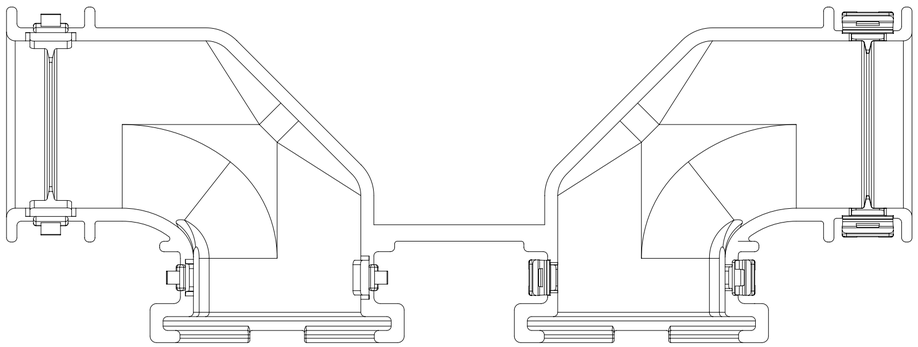 2X8 / 2X10	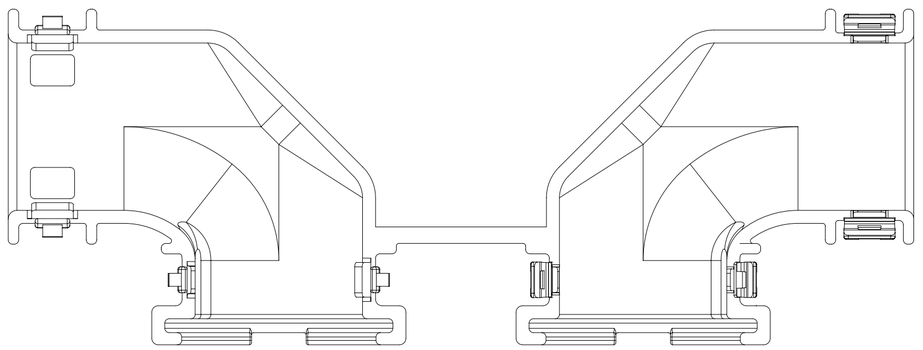 2X8 / 2X10

THIS DRAWING CONTAINS INFORMATION THAT IS PROPRIETARY TO MOLEX ELECTRONIC TECHNOLOGIES, LLC AND SHOULD NOT BE USED WITHOUT WRITTEN PERMISSION

EC NO: 632862 2020/02/25
DRWN: PPALLAN 2020/02/26
CHK'D: MVANSLAMBROU 2020/02/26
APPR: MVANSLAMBROU

GENERAL TOLERANCES (UNLESS SPECIFIED)

ANGULAR TOL ±	°
4 PLACES	±
3 PLACES	±
2 PLACES	± 0.1
1 PLACE	± 0.2
0 PLACES	±

DRAFT WHERE APPLICABLE MUST REMAIN WITHIN DIMENSIONS

A10 REV:

DIMENSION UNITS: mm
SCALE: 2:1
DRWN BY: DDEB DATE: 2017/12/08
CHK'D BY: DATE:
APPR BY: MVANSLAMBROU DATE: 2017/12/20
DRAWING SIZE: A2
THIRD ANGLE PROJECTION

molex®

MX150 90° ADAPTOR

PRODUCT CUSTOMER DRAWING

SERIES	MATERIAL NUMBER	CUSTOMER
34951		

DOCUMENT NUMBER	DOC TYPE	DOC PART	SHEET NUMBER
349510001	PSD	000	2 OF 4

RELEASE STATUS	P1	RELEASE DATE	2020/02/26 00:51:12

FORMAT: master-tb-prod-a2
REVISION: G
DATE: 2017/02/06

SHEET DESCRIPTION
DUAL ROW ADAPTOR DETAIL

CHARTED DIMENSION					
DESCRIPTION	DIMENSIONS				
	P	R	C	D	E
2X4 WITH RIB	1.35	16.10	0.80	N/A	N/A
2X4 W/O RIB	N/A	16.10	N/A	3.60	5.10
2X8/2X10 WITH RIB	1.45	19.30	0.80	N/A	N/A
2X8/2X10 W/O RIB	N/A	19.30	N/A	3.60	5.10

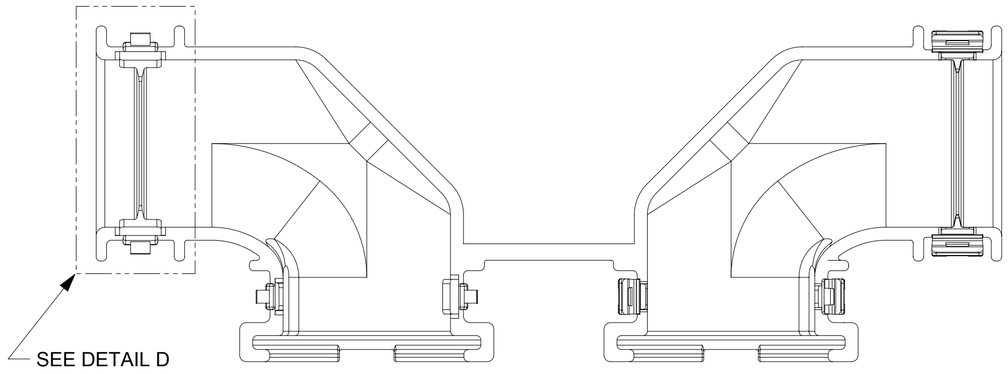

WITH RIB

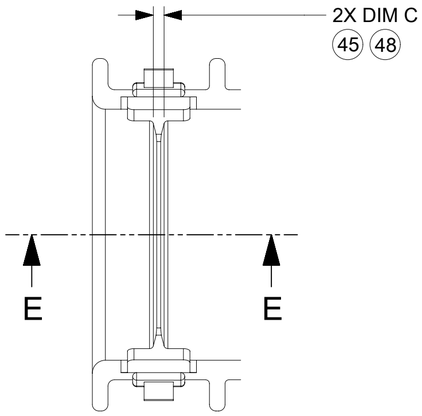

DETAIL D
SCALE 3:1

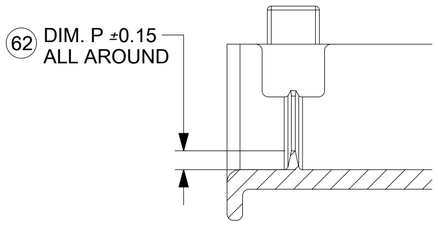

SECTION E-E

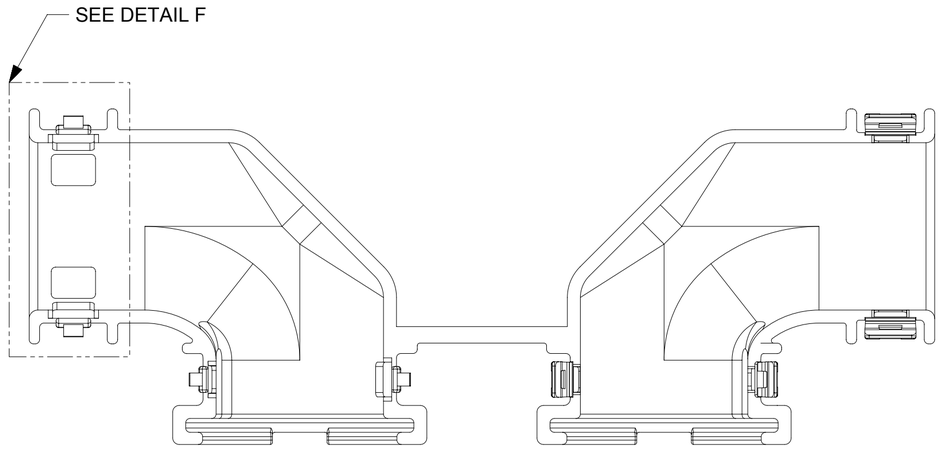

WITHOUT RIB

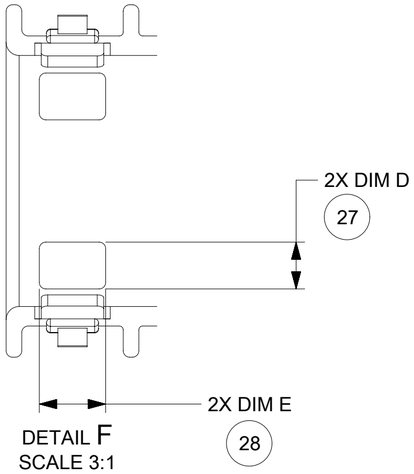

DETAIL F
SCALE 3:1

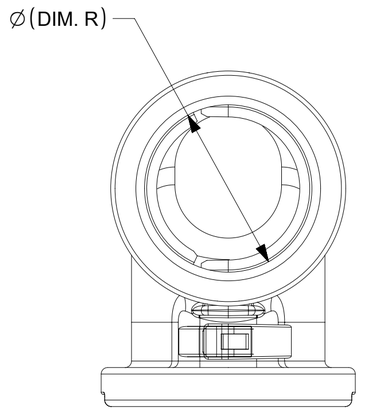

FOR WITH RIB AND WITHOUT RIB

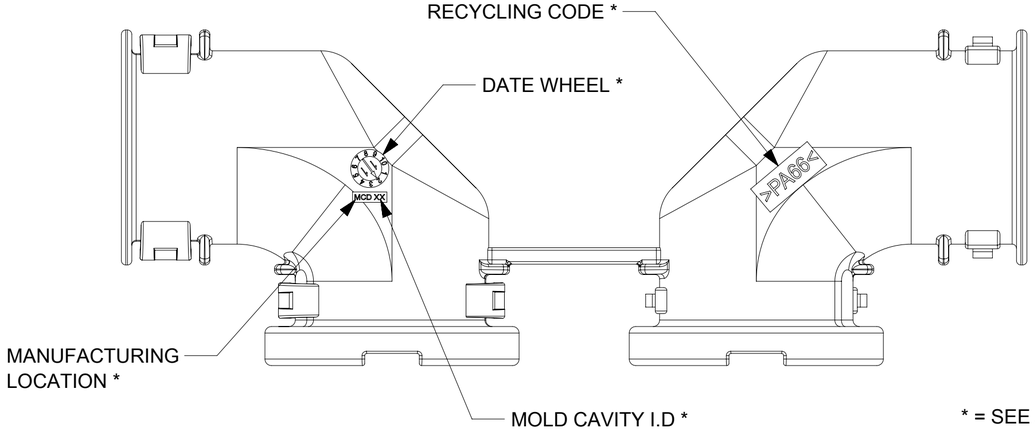

DUAL ROW

* = SEE ADAPTOR NOTES - 3.e.

THIS DRAWING CONTAINS INFORMATION THAT IS PROPRIETARY TO MOLEX ELECTRONIC TECHNOLOGIES, LLC AND SHOULD NOT BE USED WITHOUT WRITTEN PERMISSION

EC NO: 632862	DRWN: PPALLAN	CHK'D: MVANSLAMBROU	APPR: MVANSLAMBROU
2020/02/25	2020/02/26	2020/02/26	

GENERAL TOLERANCES (UNLESS SPECIFIED)

ANGULAR TOL ±		°
4 PLACES	±	
3 PLACES	±	
2 PLACES	±	0.1
1 PLACE	±	0.2
0 PLACES	±	

DRAFT WHERE APPLICABLE MUST REMAIN WITHIN DIMENSIONS

DIMENSION UNITS: mm	SCALE: 2:1		
DRWN BY: DDEB	DATE: 2017/12/08		
CHK'D BY	DATE		
APPR BY: MVANSLAMBROU	DATE: 2017/12/20		
DRAWING SIZE: A2	THIRD ANGLE PROJECTION		

molex®

MX150 90° ADAPTOR

PRODUCT CUSTOMER DRAWING

SERIES	MATERIAL NUMBER	CUSTOMER
34951		

DOCUMENT NUMBER	DOC TYPE	DOC PART	SHEET NUMBER
349510001	PSD	000	3 OF 4

A10 REV

RELEASE STATUS	P1	RELEASE DATE	2020/02/26 00:51:12

FORMAT: master-tb-prod-A2
REVISION: G
DATE: 2017/02/06

SHEET DESCRIPTION
SINGLE ROW ADAPTOR DETAIL

CHARTED DIMENSION			
DESCRIPTION	DIMENSIONS		
	A	B	C
1X3 C.S. WITH RIB	7.1	9.95	0.75

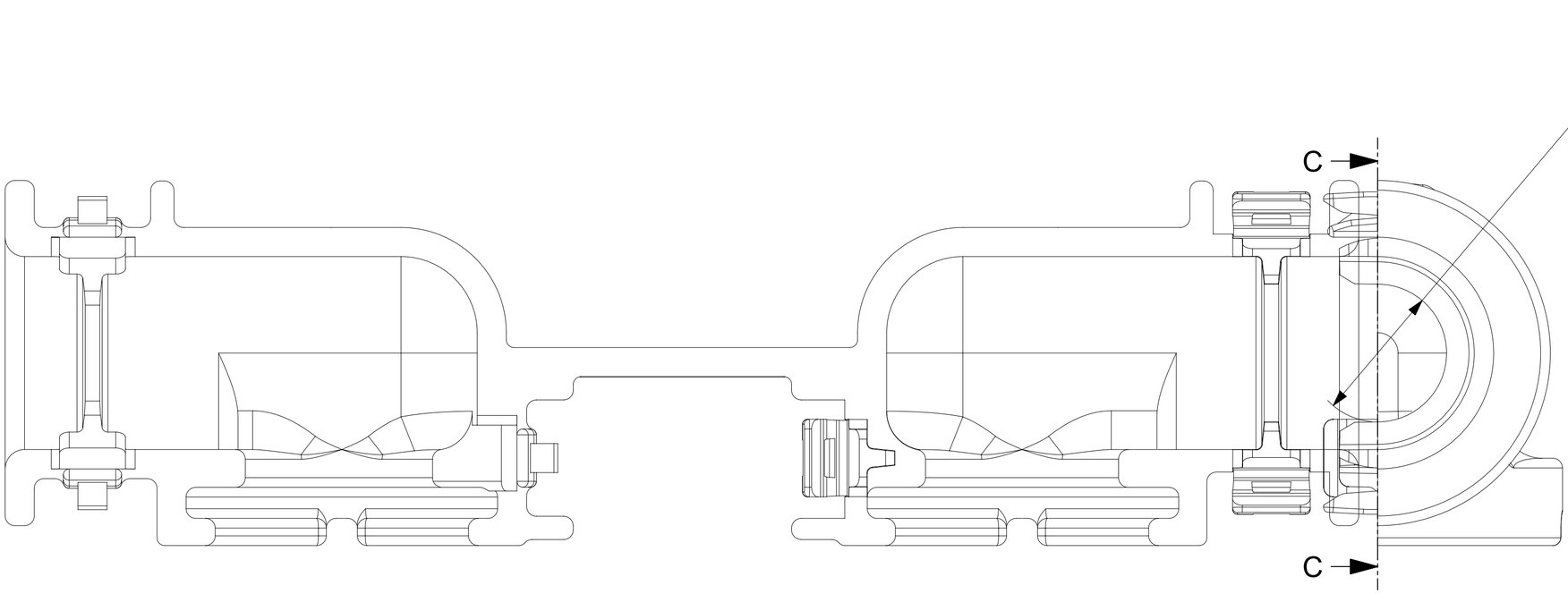

1X3 C.S.

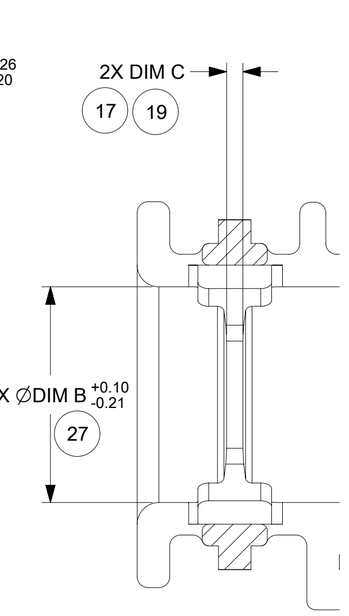

PARTIAL SECTION C-C

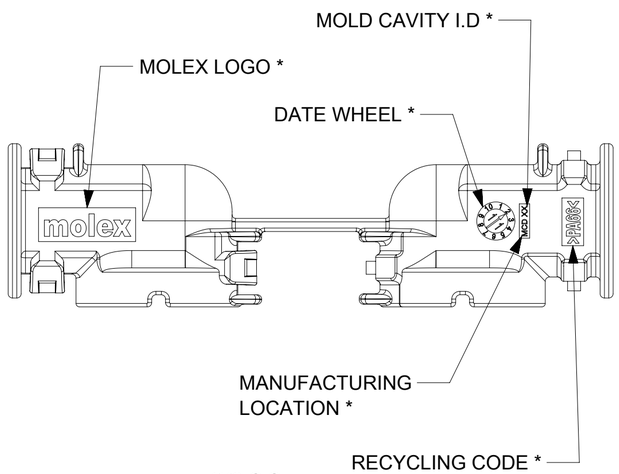

1X3 C.S.

* = SEE ADAPTOR NOTES - 3.e.

THIS DRAWING CONTAINS INFORMATION THAT IS PROPRIETARY TO MOLEX ELECTRONIC TECHNOLOGIES, LLC AND SHOULD NOT BE USED WITHOUT WRITTEN PERMISSION

DIMENSION UNITS	mm
SCALE	5:1
GENERAL TOLERANCES (UNLESS SPECIFIED)	
ANGULAR TOL ±	°
4 PLACES ±	
3 PLACES ±	
2 PLACES ±	0.1
1 PLACE ±	0.2
0 PLACES ±	
TOOL NUMBER	

Material:
Heat treat:
Finish:
CURRENT REV DESC:

EC NO:	632862	
DRWN:	PPALLAN	2020/02/25
CHK'D:	MVANSLAMBROU	2020/02/26
APPR:	MVANSLAMBROU	2020/02/26

ORIG DRWN BY: DDEB 2017/12/08

THIRD ANGLE PROJECTION | DRAWING: A2-SIZE | SERIES: 34951

molex

MX150 90° ADAPTOR

PRODUCT CUSTOMER DRAWING

DOCUMENT NUMBER	DOC TYPE	DOC PART	REVISION
349510001	PSD	000	A10

MATERIAL NUMBER	CUSTOMER	SHEET NUMBER
		4 OF 4

DOCUMENT STATUS	P1	RELEASE DATE	2020/02/26 00:51:12

FORMAT: master-tb-tool-A2
REVISION: H
DATE: 2018/01/18

TABLE OF CONTENTS

SHEET NO.	SHEET DESCRIPTION
1	NOTES AND BOM
2	CONFIGURATIONS
3-4	KEY CONFIGURATIONS
5	BLADE SEALED ASSEMBLY
6	SYSTEM PACKAGING
7	BACKSHELL NOTES
8	BACKSHELL
9	BACKSHELL CONFIGURATIONS

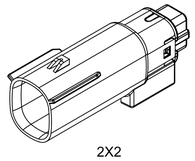

2X2

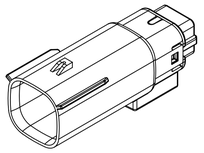

2X3

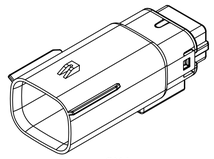

2X4

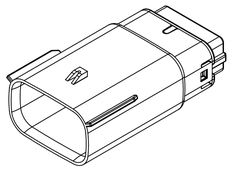

2X6

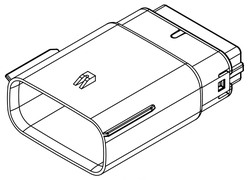

2X8

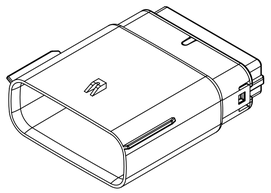

2X10

NOTES: VALID UNLESS OTHERWISE SPECIFIED

1. GENERAL:
a. APPLICATION SPECIFICATION SEE: AS-33472-100
-CONTAINS: PRODUCT INTRODUCTION, PRODUCT SUMMARY, CONNECTOR ASSEMBLY, PACKAGING INFORMATION, CONNECTOR MATING, SERVICE INSTRUCTIONS, ELECTRICAL CONTINUITY CHECKING, CRIMPING, AND TROUBLESHOOTING.
-DESIGNED TO MATE WITH RECEPTACLE SEALED ASSEMBLY AS SPECIFIED IN THE MATING CONNECTOR DRAWINGS CHART.
*DENOTES DRAWINGS THAT CAN BE ACCESSED AT <http://ewcap.uscarteams.org/>.
-ASSEMBLY SHIPPED WITH PLR IN PRE-LOCK POSITION (SEE PLR PRE-LOCK VIEW SHEET 5).

b. PRODUCT SPECIFICATION SEE:
-STANDARD CONFIGURATION: PS-33472-000
-UL V0 CONFIGURATION: TBD
CONTAINS: PRODUCT INTRODUCTION, PRODUCT SUMMARY, RATINGS (CURRENT, TEMPERATURE, SEALING, AND FLAMMABILITY), TERMINALS, WIRE DIAMETER RANGE, PRODUCT VALIDATION, AND PRODUCT DEVIATIONS.
E3
c. PACKAGING SPECIFICATION PER MOLEX DRAWING: PK-31300-903
d. PARTS MUST BE IN COMPLIANCE TO MOLEX CHEMICAL SUBSTANCES FOR PRODUCTS AND PACKAGING SPECIFICATION: QEHS-699000-300
e. DATA MUST BE SUBMITTED UNDER THE MOLEX PART NUMBER TO IMDS (COMPANY ID#13255)

2. DESIGN - MATERIALS:
a. FOR BILL OF MATERIALS: SEE BOM CHART

3. DESIGN - GEOMETRY:
a. THE 3-D CAD DATA IS BASIC (WITHOUT TOLERANCE) AND MASTER FOR THIS PART WITH THE EXCEPTION OF UNDERLINED DIMENSIONS. DIMENSIONAL INFORMATION NOT SHOWN ON THIS DRAWING IS DEFINED BY THE DATA FILE AT ITS LATEST REVISION.
b. GEOMETRIC DIMENSIONS AND TOLERANCES PER ASME Y14.5M-2009
c. EDGES AND UNDIMENSIONED DETAILS PER ISO13715
d. CORNERS SHOWN AS SHARP TO BE R 0.2 MAX.
e. LETTERING SHALL BE 0.15 MAX RAISED IN 0.25 MAX RECESS PAD. THIS INCLUDES RECYCLING CODE, CAVITY ID, VENDOR IDENTIFICATION, AND CUSTOMER MATERIAL NUMBER.
f. VISUAL DEFECTS SHALL MEET COSMETIC STANDARD PS-45499-002 (Class B).
g. LASER MARKING:
1. PART NUMBER
2. DAY OF THE YEAR
3. SHIFT
4. YEAR
FOR ADDITIONAL INFORMATION SEE SECTION 5 UNDER PROCEDURES IN ES-34735-008.

BILL OF MATERIALS (BOM)

E3

DESCRIPTION	DRAWING NO.
UL V0 VERSION	SD-160084-0002
STANDARD 2X2	334820402
STANDARD 2X3	334820602
STANDARD 2X4	334820802
STANDARD 2X6	334821202
STANDARD 2X8	334821602
STANDARD 2X10	334822002

MATING CONNECTOR DRAWINGS

DESCRIPTION	MOLEX INLINE
2X2	SD-33472-0001
2X3	SD-33472-0001
2X4	SD-33472-0001
2X6	SD-33472-0001
2X8	SD-33472-0001
2X10	SD-33472-0001

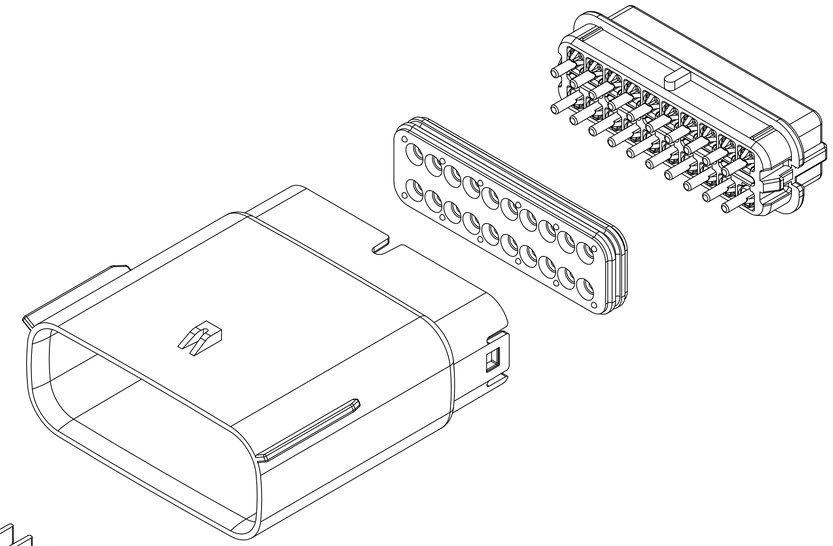

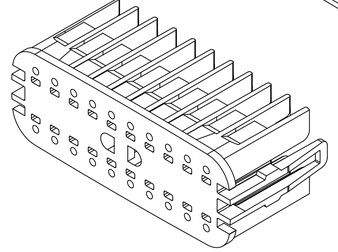

REV	REV DESCRIPTION
E3	1. ADDED BOM CHART ON SHEET 1 2. UPDATED PACKAGING DRAWING NO. ON NOTES ON SHEET 1
E2	ADDED MOLEX BACKSHELL DETAILS
E1	MIGRATED FROM COCREATE AND IMPORTED DXF FILES
E	ADDED CHARTED DIMENSIONS FOR 2X2, 2X4, 2X6 AND 2X8 WITH CLIPSLOT
D	MINOR GEOMETRY CHANGE FOR UL V0
C3	ADD 2X4
C2	ADD 2X3
C1	ADD UL V0 CONFIGURATIONS
C	ADD 2X8
B1	ADD 2X6 BACKSHELL INFO
B	ADD 2X6
A	INITIAL RELEASE

INSPECTION NUMBER LOG
LAST NUMBER: 9 ADDED: REMOVED:

THIS DRAWING CONTAINS INFORMATION THAT IS PROPRIETARY TO MOLEX ELECTRONIC TECHNOLOGIES, LLC AND SHOULD NOT BE USED WITHOUT WRITTEN PERMISSION

FUNCTIONAL SYMBOLS
FA = 0
FC = 0
FP = 0
DIVISIONAL SYMBOLS

DIMENSION UNITS	SCALE
mm	1.5:1

GENERAL TOLERANCES (UNLESS SPECIFIED)

ANGULAR TOL	± 1°
4 PLACES	±
3 PLACES	±
2 PLACES	± 0.100
1 PLACE	± 0.20
0 PLACES	±

DRAFT WHERE APPLICABLE MUST REMAIN WITHIN DIMENSIONS

CURRENT REV DESC:

STATUS: Production
DRWN: Yann Chen 2023-09-26
CHK'D: Yu Chao Fu 2023-09-26
APPR: Elvis Song 2023-09-27

THIRD ANGLE PROJECTION

molex

MX150 BLADE
DUAL ROW SEALED ASSEMBLY

PRODUCT SALES DRAWING

DOCUMENT NUMBER	DOC TYPE	DOC PART	REVISION
SD-33482-0001	PSD	001	E3

DRAWING	SERIES	MATERIAL NUMBER	CUSTOMER	SHEET NUMBER
A1-SIZE	33482		GENERAL MARKET	1 OF 11

FORMAT TC(equivalent)
REVISION: B
DATE: 2022/08/01

SHEET DESCRIPTION
CONFIGURATIONS

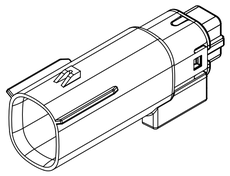

2X2 - STANDARD (STD)

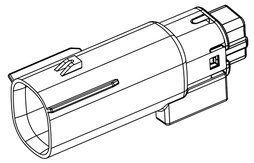

2X2 - UL V0*

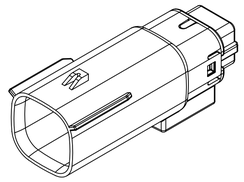

2X3 - STANDARD (STD)

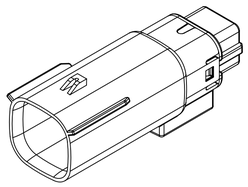

2X3 - LENGTHENED

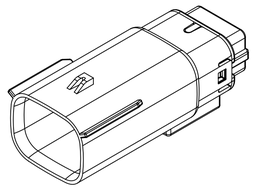

2X4 - STANDARD (STD)

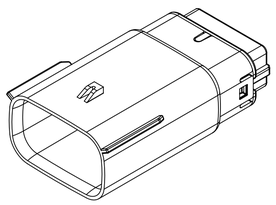

2X6 - STANDARD (STD)

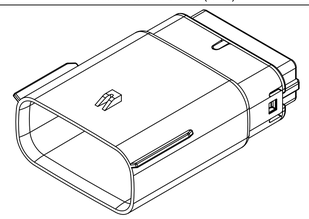

2X8 - STANDARD (STD)

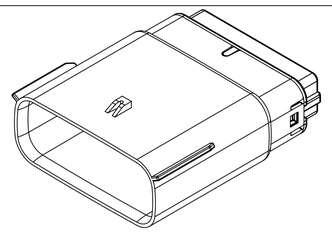

2X10 - STANDARD (STD)

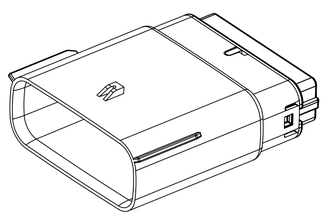

2X10 - UL V0*

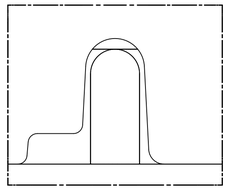

UL V0 UNIQUE FEATURE
Partial1
SCALE 10:1

* MINOR GEOMETRY CHANGE THAN STANDARD CONFIGURATION.
SEE NOTE 2a FOR MORE INFORMATION

THIS DRAWING CONTAINS INFORMATION THAT IS PROPRIETARY TO MOLEX ELECTRONIC TECHNOLOGIES, LLC AND SHOULD NOT BE USED WITHOUT WRITTEN PERMISSION

FUNCTIONAL SYMBOLS	DIMENSION UNITS	SCALE	CURRENT REV DESC:
FA = 0	mm	1.5:1	
FC = 0	GENERAL TOLERANCES (UNLESS SPECIFIED)		
FP = 0	ANGULAR TOL	± 1°	
	4 PLACES	±	
DIVISIONAL SYMBOLS	3 PLACES	±	
	2 PLACES	± 0.100	STATUS: Production
	1 PLACE	± 0.20	DRWN: Yann Chen 2023-09-26
	0 PLACES	±	CHK'D: Yu Chao Fu 2023-09-26
			APPR: Elvis Song 2023-09-27

DRAFT WHERE APPLICABLE MUST REMAIN WITHIN DIMENSIONS

THIRD ANGLE PROJECTION	DRAWING	SERIES	MATERIAL NUMBER	CUSTOMER	SHEET NUMBER
	A1-SIZE	33482		GENERAL MARKET	2 OF 11

molex

MX150 BLADE
DUAL ROW SEALED ASSEMBLY

PRODUCT SALES DRAWING

DOCUMENT NUMBER	DOC TYPE	DOC PART	REVISION
SD-33482-0001	PSD	001	E3

SHEET DESCRIPTION
KEY CONFIGURATIONS

2X2

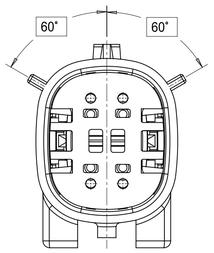

KEY A

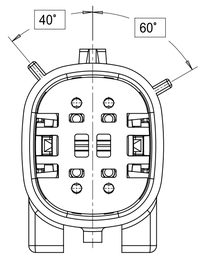

KEY B

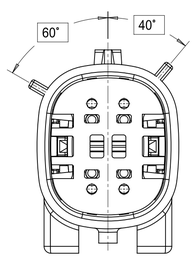

KEY C

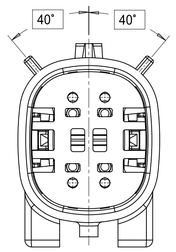

KEY D

2X3

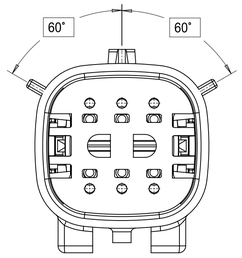

KEY A

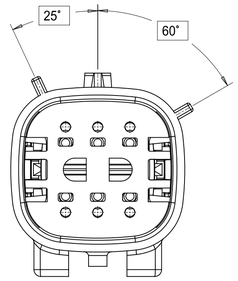

KEY B

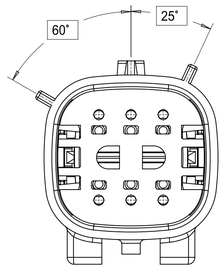

KEY C

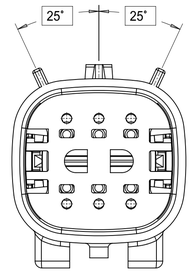

KEY D

2X4

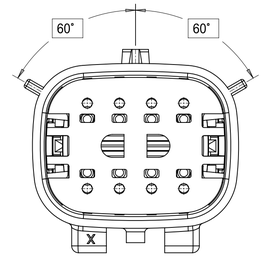

KEY A

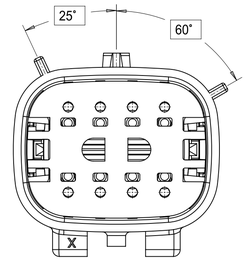

KEY B

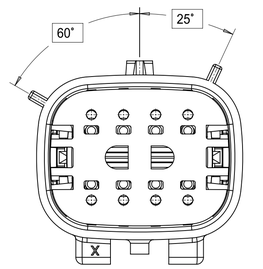

KEY C

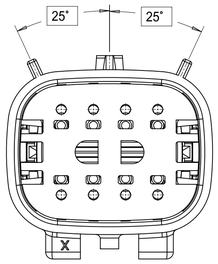

KEY D

FUNCTIONAL SYMBOLS	
FA	= 0
FC	= 0
FP	= 0
DIVISIONAL SYMBOLS	

THIS DRAWING CONTAINS INFORMATION THAT IS PROPRIETARY TO MOLEX ELECTRONIC TECHNOLOGIES, LLC AND SHOULD NOT BE USED WITHOUT WRITTEN PERMISSION

DIMENSION UNITS	SCALE
mm	3:1

GENERAL TOLERANCES (UNLESS SPECIFIED)

ANGULAR TOL	± 1°
4 PLACES	±
3 PLACES	±
2 PLACES	± 0.100
1 PLACE	± 0.20
0 PLACES	±

DRAFT WHERE APPLICABLE MUST REMAIN WITHIN DIMENSIONS

CURRENT REV DESC:

STATUS: Production
DRWN: Yann Chen 2023-09-26
CHK'D: Yu Chao Fu 2023-09-26
APPR: Elvis Song 2023-09-27

THIRD ANGLE PROJECTION

DRAWING	SERIES
A1-SIZE	33482

molex

MX150 BLADE
DUAL ROW SEALED ASSEMBLY

PRODUCT SALES DRAWING

DOCUMENT NUMBER	DOC TYPE	DOC PART	REVISION
SD-33482-0001	PSD	001	E3

MATERIAL NUMBER	CUSTOMER	SHEET NUMBER
	GENERAL MARKET	3 OF 11

SHEET DESCRIPTION
KEY CONFIGURATIONS CONT.

2X6

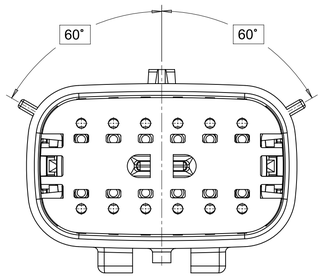

KEY A

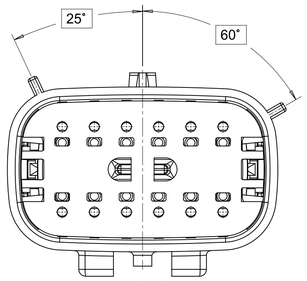

KEY B

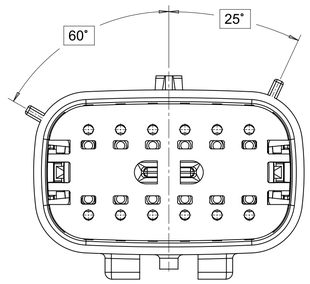

KEY C

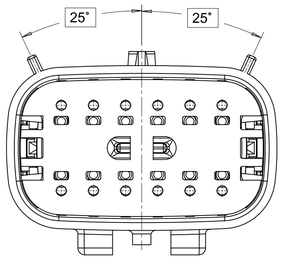

KEY D

2X8

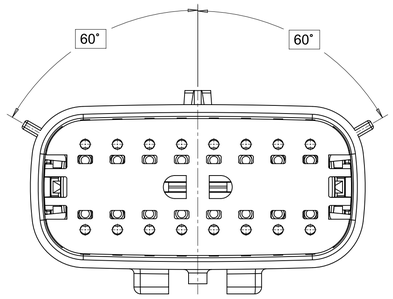

KEY A

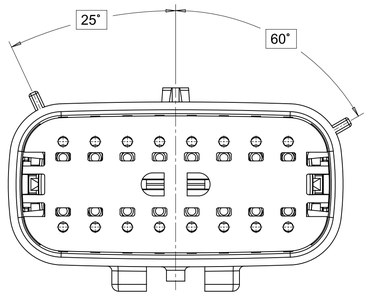

KEY B

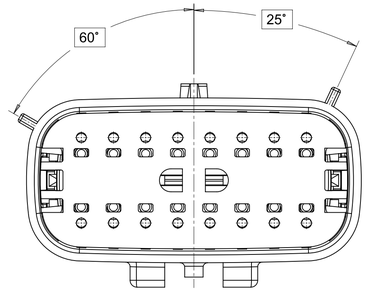

KEY C

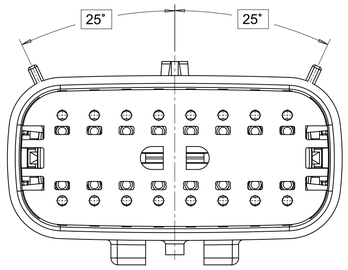

KEY D

2X10

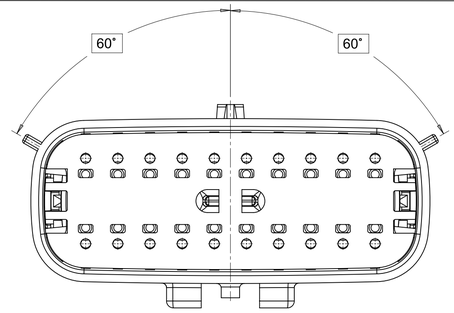

KEY A

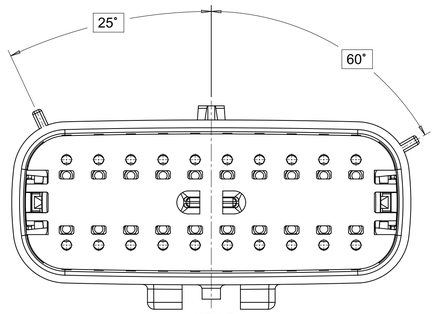

KEY B

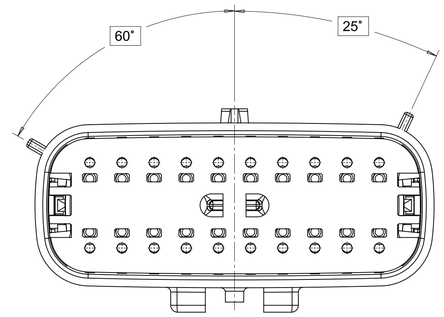

KEY C

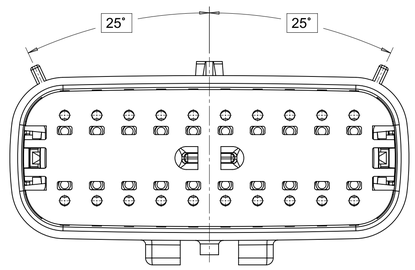

KEY D

THIS DRAWING CONTAINS INFORMATION THAT IS PROPRIETARY TO MOLEX ELECTRONIC TECHNOLOGIES, LLC AND SHOULD NOT BE USED WITHOUT WRITTEN PERMISSION

FUNCTIONAL SYMBOLS
FA = 0
FC = 0
FP = 0

DIVISIONAL SYMBOLS

DIMENSION UNITS	SCALE
mm	3:1

GENERAL TOLERANCES (UNLESS SPECIFIED)

ANGULAR TOL	± 1°
4 PLACES	±
3 PLACES	±
2 PLACES	± 0.100
1 PLACE	± 0.20
0 PLACES	±

DRAFT WHERE APPLICABLE MUST REMAIN WITHIN DIMENSIONS

CURRENT REV DESC:

STATUS: Production
DRWN: Yann Chen 2023-09-26
CHK'D: Yu Chao Fu 2023-09-26
APPR: Elvis Song 2023-09-27

THIRD ANGLE PROJECTION

DRAWING	SERIES
A1-SIZE	33482

molex

MX150 BLADE
DUAL ROW SEALED ASSEMBLY

PRODUCT SALES DRAWING

DOCUMENT NUMBER	DOC TYPE	DOC PART	REVISION
SD-33482-0001	PSD	001	E3

MATERIAL NUMBER	CUSTOMER	SHEET NUMBER
	GENERAL MARKET	4 OF 11

SHEET DESCRIPTION
BLADE SEALED ASSEMBLY

DESCRIPTION	CHARTED DIMENSION				
	DIMENSIONS				
	A	B	C	D	E
2X2	15.54	1.75	24.40	54.45	22.23
2X3 STANDARD	19.04	3.50	26.21	54.45	22.23
2X3 LENGTHENED	19.04	3.50	26.21	56.45	22.23
2X4	22.54	1.75	27.21	54.45	22.23
2X6	29.54	1.75	32.27	54.45	22.23
2X8	36.54	1.75	38.88	54.45	22.23
2X10	43.64	1.75	45.65	54.45	22.05

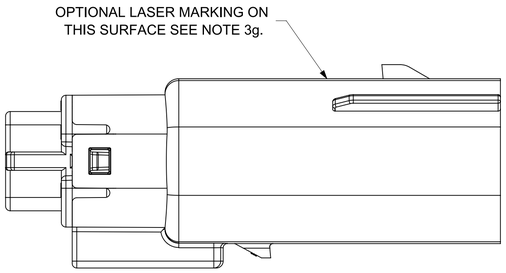

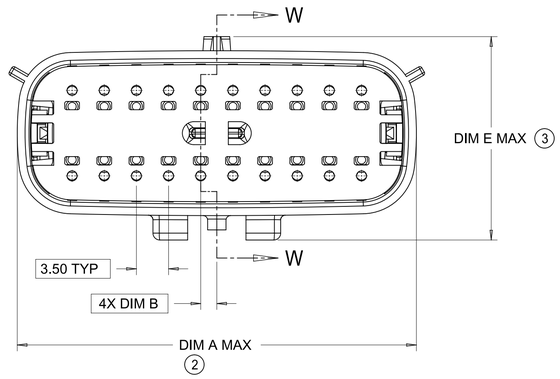

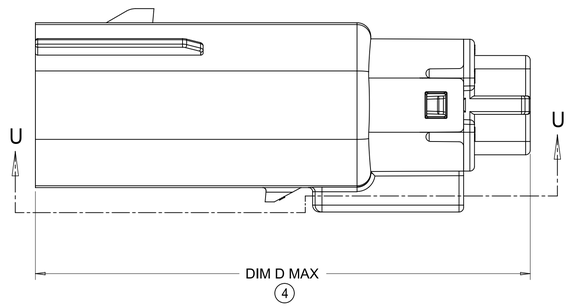

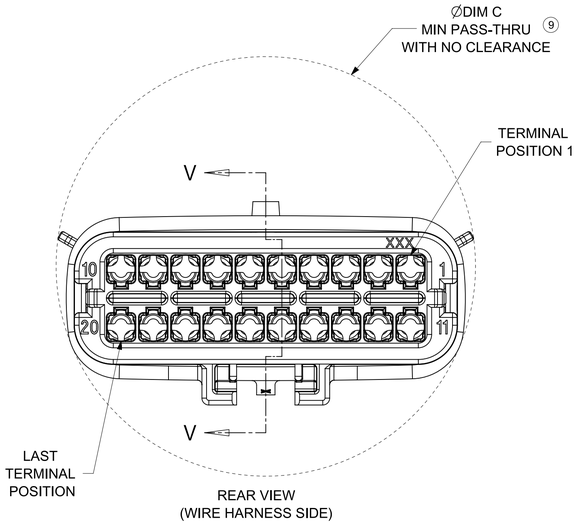

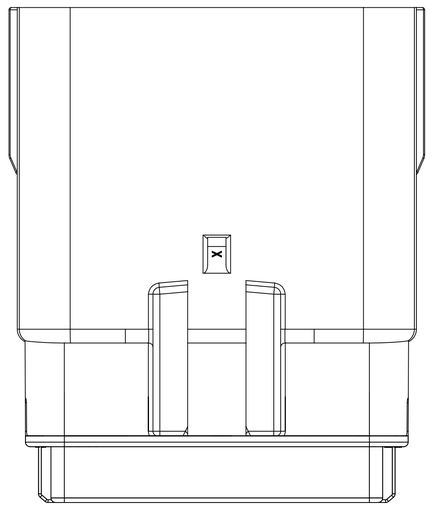

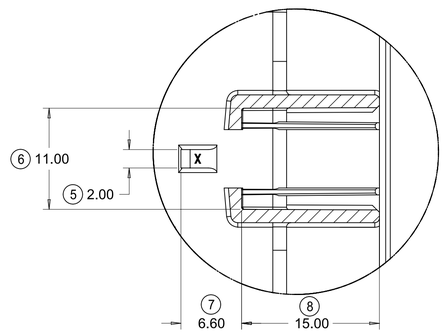

PartialU-U
SCALE 3:1

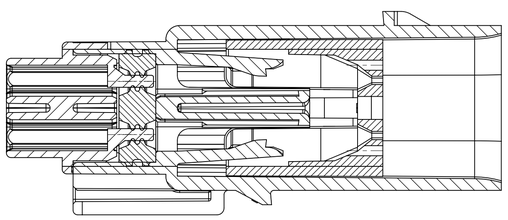

PRIMARY LOCK REINFORCEMENT (PLR) SHOWN
IN PRE-STAGED POSITION

SECTION W-W

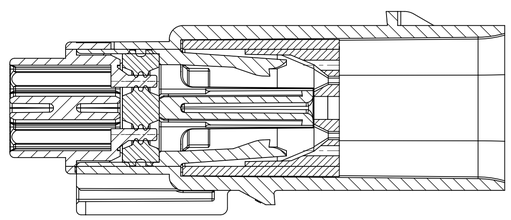

PRIMARY LOCK REINFORCEMENT (PLR) SHOWN
IN FINAL-LOCK POSITION

SECTION V-V

THIS DRAWING CONTAINS INFORMATION THAT IS PROPRIETARY TO MOLEX ELECTRONIC TECHNOLOGIES, LLC AND SHOULD NOT BE USED WITHOUT WRITTEN PERMISSION

FUNCTIONAL SYMBOLS
FA = 0
FC = 0
FD = 0
DIVISIONAL SYMBOLS

DIMENSION UNITS	SCALE
mm	3:1

GENERAL TOLERANCES (UNLESS SPECIFIED)

ANGULAR TOL	± 1°
4 PLACES	±
3 PLACES	±
2 PLACES	± 0.100
1 PLACE	± 0.20
0 PLACES	±

DRAFT WHERE APPLICABLE MUST REMAIN WITHIN DIMENSIONS

CURRENT REV DESC:

STATUS: Production
DRWN: Yann Chen 2023-09-26
CHK'D: Yu Chao Fu 2023-09-26
APPR: Elvis Song 2023-09-27

molex

MX150 BLADE
DUAL ROW SEALED ASSEMBLY

PRODUCT SALES DRAWING

DOCUMENT NUMBER	DOC TYPE	DOC PART	REVISION
SD-33482-0001	PSD	001	E3

THIRD ANGLE PROJECTION	DRAWING	SERIES	MATERIAL NUMBER	CUSTOMER	SHEET NUMBER
	A1-SIZE	33482		GENERAL MARKET	5 OF 11

SHEET DESCRIPTION
SYSTEM PACKAGING

CHARTED DIMENSION				
CKT	BLADE CONFIGURATION	RECEPTACLE CONFIGURATION	DIMENSIONS	
			K	L
2X2	STANDARD	W/O CLIPSLOT	72.78	28.00
		W/ CLIPSLOT	72.78	28.50
		LENGTHENED	77.21	28.00
2X3	STANDARD	W/O CLIPSLOT	72.78	28.00
		W/ CLIPSLOT		30.50
	LENGTHENED	W/O CLIPSLOT	74.79	28.00
		W/ CLIPSLOT		30.50
2X4	STANDARD	W/O CLIPSLOT	72.78	29.50
		W/ CLIPSLOT		31.50
2X6	STANDARD	W/O CLIPSLOT	72.79	35.58
		W/ CLIPSLOT		
2X8	STANDARD	W/O CLIPSLOT	72.67	42.25
		W/ CLIPSLOT		
2X10	STANDARD	STANDARD	72.78	49.05

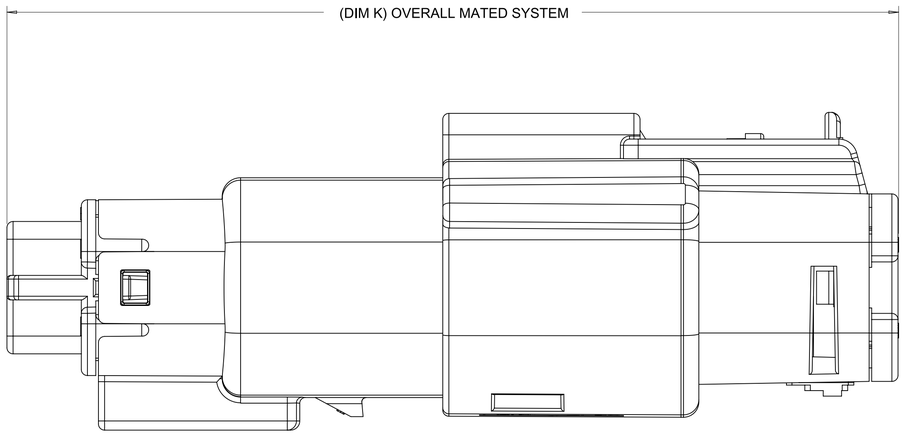

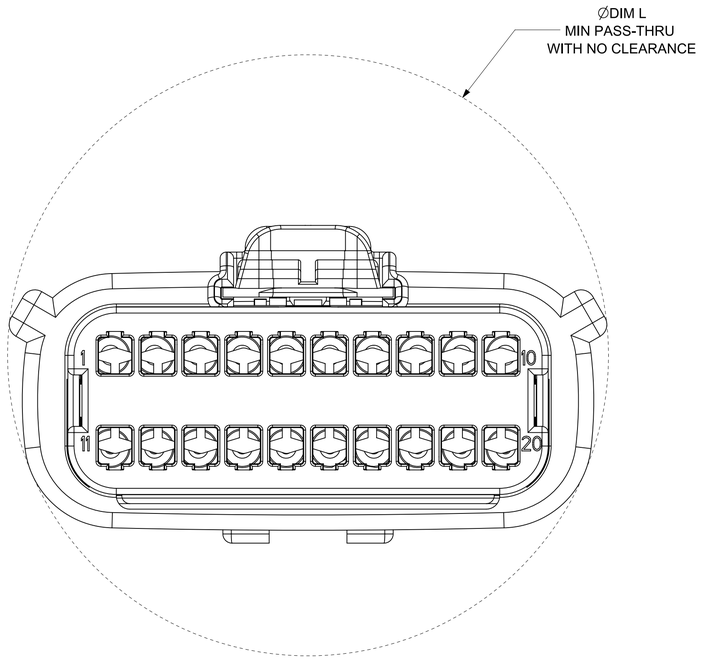

THIS DRAWING CONTAINS INFORMATION THAT IS PROPRIETARY TO MOLEX ELECTRONIC TECHNOLOGIES, LLC AND SHOULD NOT BE USED WITHOUT WRITTEN PERMISSION

FUNCTIONAL SYMBOLS	DIMENSION UNITS	SCALE
FA = 0	mm	4:1
FC = 0	GENERAL TOLERANCES (UNLESS SPECIFIED)	
FP = 0	ANGULAR TOL	± 1°
DIVISIONAL SYMBOLS	4 PLACES	±
	3 PLACES	±
	2 PLACES	± 0.100
	1 PLACE	± 0.20
	0 PLACES	±
	DRAFT WHERE APPLICABLE MUST REMAIN WITHIN DIMENSIONS	

CURRENT REV DESC:

STATUS: Production
DRWN: Yann Chen 2023-09-26
CHK'D: Yu Chao Fu 2023-09-26
APPR: Elvis Song 2023-09-27

THIRD ANGLE PROJECTION

DRAWING	SERIES
A1-SIZE	33482

molex

MX150 BLADE
DUAL ROW SEALED ASSEMBLY

PRODUCT SALES DRAWING

DOCUMENT NUMBER	DOC TYPE	DOC PART	REVISION
SD-33482-0001	PSD	001	E3

MATERIAL NUMBER	CUSTOMER	SHEET NUMBER
	GENERAL MARKET	6 OF 11

SHEET DESCRIPTION
BACKSHELL NOTES

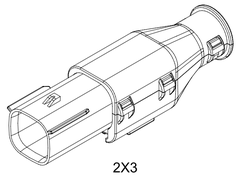

2X3

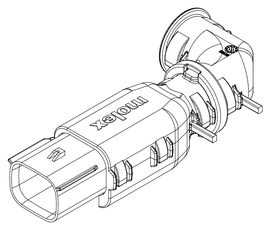

2X4

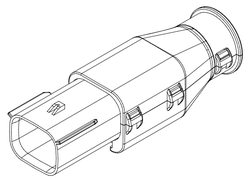

2X4

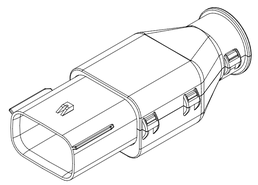

2X6

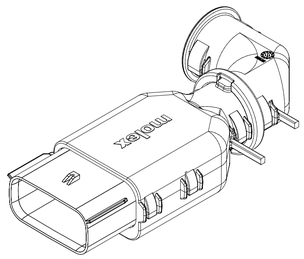

2X8

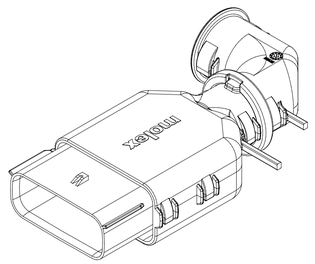

2X10

BACKSHELL NOTES: VALID UNLESS OTHERWISE SPECIFIED

1. GENERAL:
a. APPLICATION SPECIFICATION SEE: AS-34951-001
- -DESIGNED TO MATE WITH BLADE SEALED ASSEMBLY SPECIFIED IN MOLEX DRAWING SD-33482-0001.
- -SYSTEM TO BE USED WITH WIRE WITHIN DIAMETER RANGE OF 1.2mm TO 2.69mm.
- -COMPONENTS ARE OPTIONAL AND MUST BE PURCHASED SEPERATELY.
- -DESIGN IS OWNED BY SCHLEMMER FOR SCHLEMMER BACKSHELL.
- -DESIGN IS OWNED BY MOLEX FOR MOLEX BACKSHELL.
- -90˚ ADAPTOR DESIGN IS OWNED BY MOLEX.
- -FOR ADDITIONAL INFORMATION SEE THE BACKSHELL COMPONENT DRAWING SD-34950-0001.

BACKSHELL CUSTOMER
MODEL NUMBER LEGEND

34950-XXXX

CUSTOMER MODEL COMPONENTS
- 0 - SCHLEMMER BACKSHELL ONLY
- 1 - SCHLEMMER BACKSHELL & MX150 HOUSING KEY A ASSEMBLY
- 2 - SCHLEMMER BACKSHELL & MX150 HOUSING KEY B ASSEMBLY
- 3 - SCHLEMMER BACKSHELL & MX150 HOUSING KEY C ASSEMBLY
- 4 - SCHLEMMER BACKSHELL & MX150 HOUSING KEY D ASSEMBLY
- 5 - MOLEX BACKSHELL ONLY
- 6 - MOLEX BACKSHELL & MX150 HOUSING KEY A ASSEMBLY
- 7 - MOLEX BACKSHELL & MX150 HOUSING KEY B ASSEMBLY
- 8 - MOLEX BACKSHELL & MX150 HOUSING KEY C ASSEMBLY
- 9 - MOLEX BACKSHELL & MX150 HOUSING KEY D ASSEMBLY

BACKSHELL FEATURES
- 1 - WITH RIBS
- 2 - WITHOUT RIBS
- 3 - 90˚ ADAPTOR

MX150 CIRCUIT SIZE 04, 06, 08, 12, 16, 20

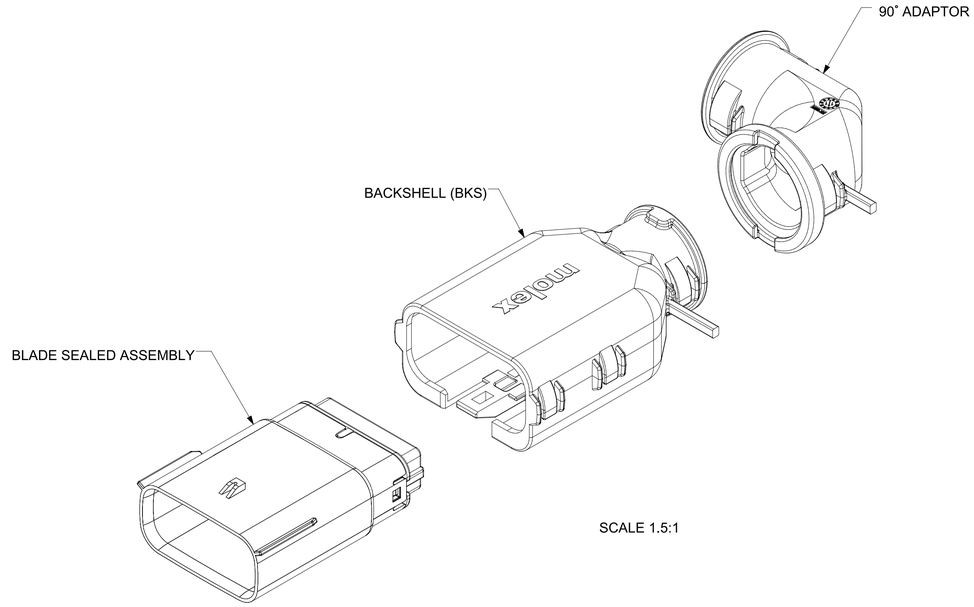

SCALE 1.5:1

FUNCTIONAL SYMBOLS	THIS DRAWING CONTAINS INFORMATION THAT IS PROPRIETARY TO MOLEX ELECTRONIC TECHNOLOGIES, LLC AND SHOULD NOT BE USED WITHOUT WRITTEN PERMISSION			
FA = 0	DIMENSION UNITS: mm	SCALE: 1.5:1	CURRENT REV DESC:	molex
FC = 0	GENERAL TOLERANCES (UNLESS SPECIFIED)			MX150 BLADE DUAL ROW SEALED ASSEMBLY
FP = 0	ANGULAR TOL ± 1˚			
DIVISIONAL SYMBOLS	4 PLACES ±			PRODUCT SALES DRAWING
	3 PLACES ±			
	2 PLACES ± 0.100		STATUS: Production	DOCUMENT NUMBER: SD-33482-0001
	1 PLACE ± 0.20		DRWN: Yann Chen 2023-09-26	DOC TYPE: PSD; DOC PART: 001; REVISION: E3
	0 PLACES ±		CHK'D: Yu Chao Fu 2023-09-26	
			APPR: Elvis Song 2023-09-27	
	DRAFT WHERE APPLICABLE MUST REMAIN WITHIN DIMENSIONS	THIRD ANGLE PROJECTION	DRAWING: A1-SIZE; SERIES: 33482	MATERIAL NUMBER; CUSTOMER: GENERAL MARKET; SHEET NUMBER: 7 OF 11

SHEET DESCRIPTION
SCHLEMMER BACKSHELL

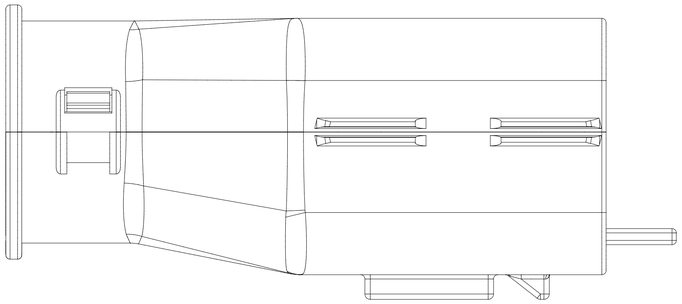

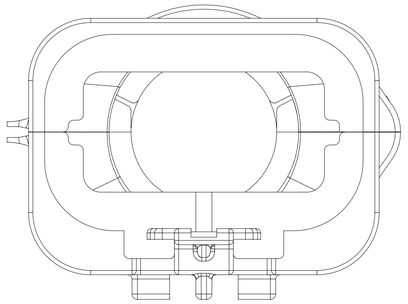

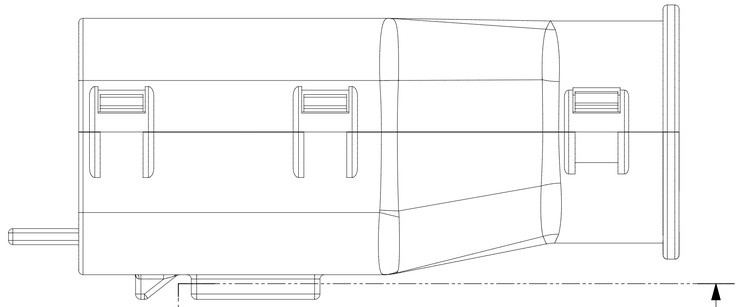

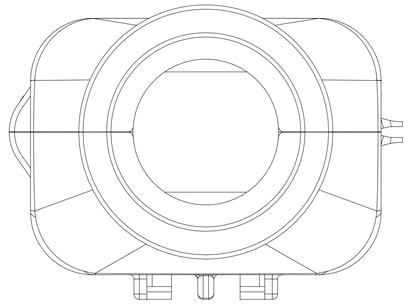

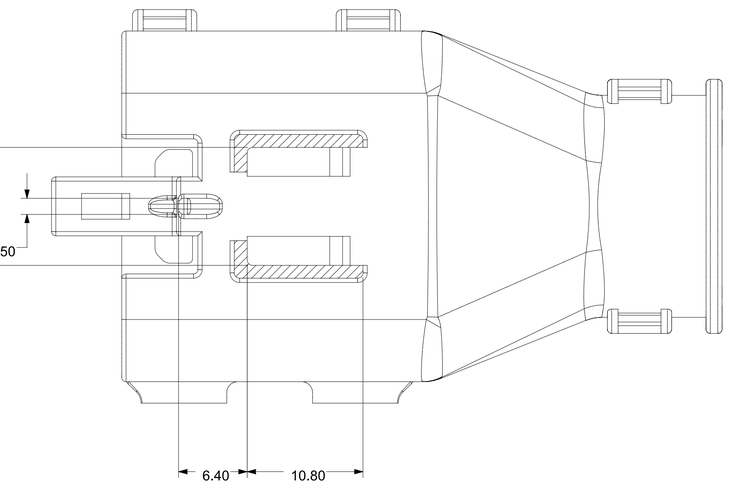

SECTION A-A

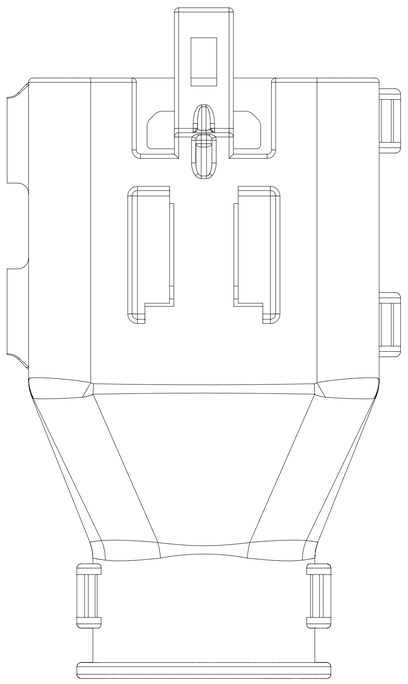

FUNCTIONAL SYMBOLS		THIS DRAWING CONTAINS INFORMATION THAT IS PROPRIETARY TO MOLEX ELECTRONIC TECHNOLOGIES, LLC AND SHOULD NOT BE USED WITHOUT WRITTEN PERMISSION			
FA =	0	DIMENSION UNITS: mm	SCALE: 3.5:1	CURRENT REV DESC:	molex
FC =	0	GENERAL TOLERANCES (UNLESS SPECIFIED)			MX150 BLADE DUAL ROW SEALED ASSEMBLY
FD =	0	ANGULAR TOL ± 1°			PRODUCT SALES DRAWING
DIVISIONAL SYMBOLS		4 PLACES ±		STATUS: Production	DOCUMENT NUMBER: SD-33482-0001 / DOC TYPE: PSD / DOC PART: 001 / REVISION: E3
		3 PLACES ±		DRWN: Yann Chen 2023-09-26	
		2 PLACES ± 0.100		CHK'D: Yu Chao Fu 2023-09-26	
		1 PLACE ± 0.20		APPR: Elvis Song 2023-09-27	
		0 PLACES ±		THIRD ANGLE PROJECTION	DRAWING: A1-SIZE / SERIES: 33482
		DRAFT WHERE APPLICABLE MUST REMAIN WITHIN DIMENSIONS		MATERIAL NUMBER	CUSTOMER: GENERAL MARKET / SHEET NUMBER: 8 OF 11

SHEET DESCRIPTION
MOLEX BACKSHELL

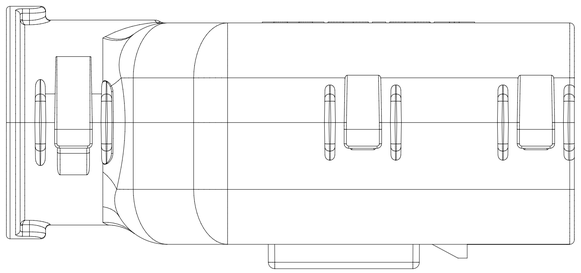

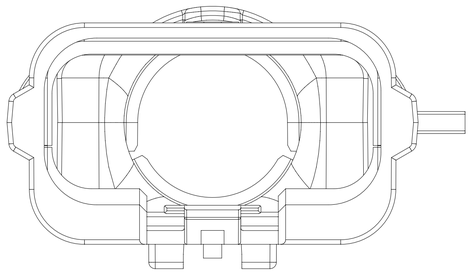

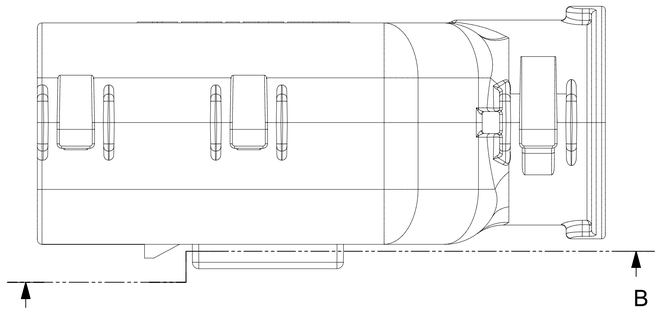

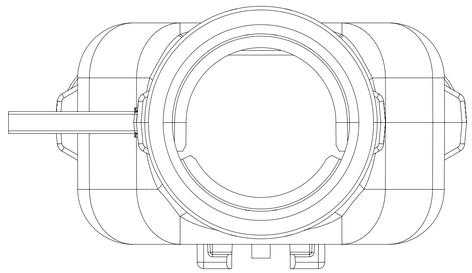

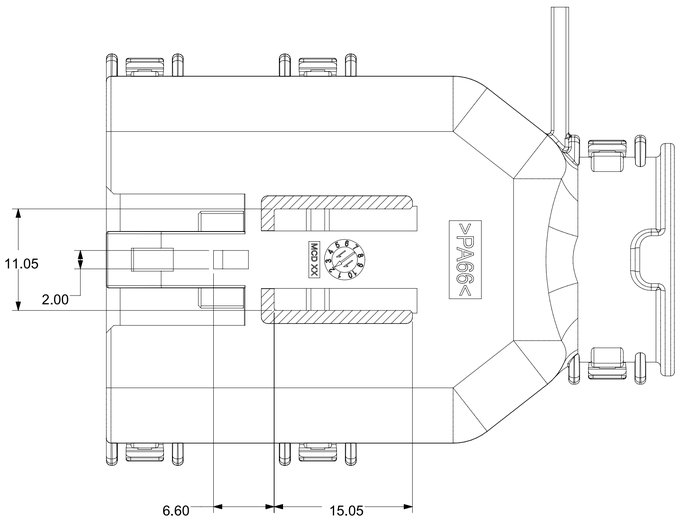

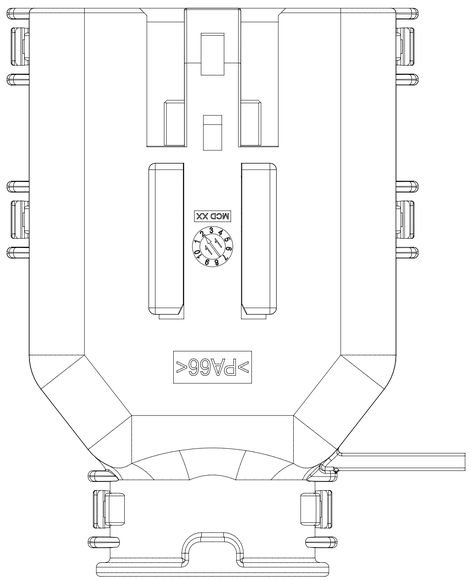

SECTION B-B

FUNCTIONAL SYMBOLS	THIS DRAWING CONTAINS INFORMATION THAT IS PROPRIETARY TO MOLEX ELECTRONIC TECHNOLOGIES, LLC AND SHOULD NOT BE USED WITHOUT WRITTEN PERMISSION			
FA = 0	DIMENSION UNITS: mm	SCALE: 3:1	CURRENT REV DESC:	molex
FC = 0	GENERAL TOLERANCES (UNLESS SPECIFIED)			MX150 BLADE DUAL ROW SEALED ASSEMBLY
FP = 0	ANGULAR TOL ± 1°			PRODUCT SALES DRAWING
DIVISIONAL SYMBOLS	4 PLACES ±		STATUS: Production	DOCUMENT NUMBER: SD-33482-0001 / DOC TYPE: PSD / DOC PART: 001 / REVISION: E3
	3 PLACES ±		DRWN: Yann Chen 2023-09-26	
	2 PLACES ± 0.100		CHK'D: Yu Chao Fu 2023-09-26	
	1 PLACE ± 0.20		APPR: Elvis Song 2023-09-27	
	0 PLACES ±			
	DRAFT WHERE APPLICABLE MUST REMAIN WITHIN DIMENSIONS	THIRD ANGLE PROJECTION	DRAWING: A1-SIZE / SERIES: 33482	MATERIAL NUMBER / CUSTOMER: GENERAL MARKET / SHEET NUMBER: 9 OF 11

SHEET DESCRIPTION
SCHLEMMER BACKSHELL CONFIGURATIONS

CHARTED DIMENSIONS

CKT	BLADE CONFIGURATION	RECEPTACLE CONFIGURATION	DIMENSIONS				
			M	N	P	R	T
2X3	STANDARD	STANDARD	106.83	32.75	31.75	29.00	29.50
	LENGTHENED		108.71				
2X4	STANDARD	STANDARD	106.83	33.50	31.90	30.70	30.70
2X6	STANDARD	STANDARD	106.83	37.84	37.27	35.83	36.83

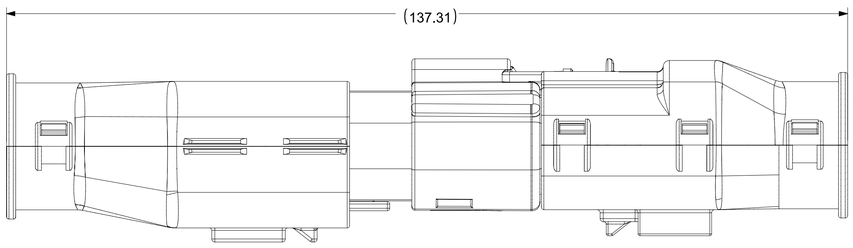

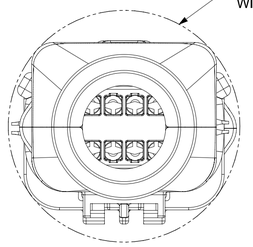

OVERALL MATED SYSTEM WITH BLADE AND RECEPTACLE BACKSHELL

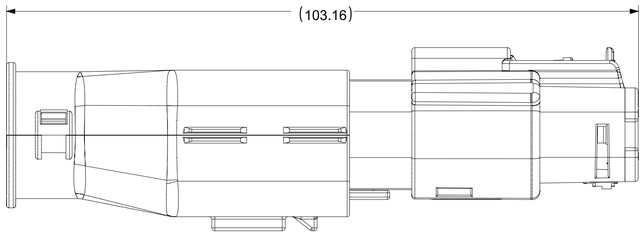

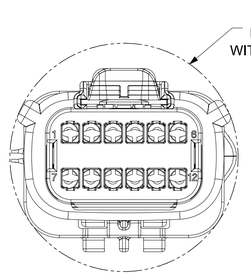

OVERALL MATED SYSTEM WITH BLADE BACKSHELL

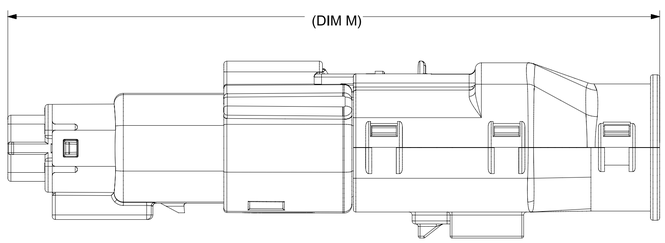

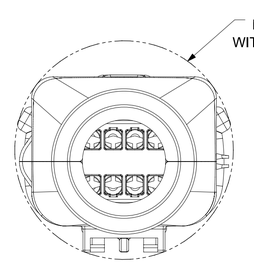

OVERALL MATED SYSTEM WITH RECEPTACLE BACKSHELL

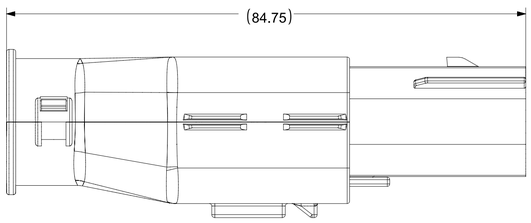

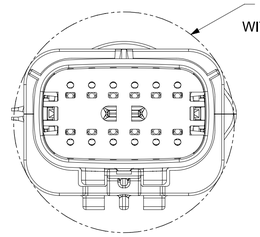

BLADE SEALED ASSEMBLY WITH BLADE BACKSHELL

THIS DRAWING CONTAINS INFORMATION THAT IS PROPRIETARY TO MOLEX ELECTRONIC TECHNOLOGIES, LLC AND SHOULD NOT BE USED WITHOUT WRITTEN PERMISSION

FUNCTIONAL SYMBOLS
FA = 0
FC = 0
FD = 0
DIVISIONAL SYMBOLS

DIMENSION UNITS	SCALE
mm	2:1

GENERAL TOLERANCES (UNLESS SPECIFIED)

ANGULAR TOL	± 1°
4 PLACES	±
3 PLACES	±
2 PLACES	± 0.100
1 PLACE	± 0.20
0 PLACES	±

DRAFT WHERE APPLICABLE MUST REMAIN WITHIN DIMENSIONS

CURRENT REV DESC:

STATUS: Production
DRWN: Yann Chen 2023-09-26
CHK'D: Yu Chao Fu 2023-09-26
APPR: Elvis Song 2023-09-27

THIRD ANGLE PROJECTION

molex

MX150 BLADE
DUAL ROW SEALED ASSEMBLY

PRODUCT SALES DRAWING

DOCUMENT NUMBER	DOC TYPE	DOC PART	REVISION
SD-33482-0001	PSD	001	E3

DRAWING	SERIES	MATERIAL NUMBER	CUSTOMER	SHEET NUMBER
A1-SIZE	33482		GENERAL MARKET	10 OF 11

FORMAT TS-drg-vertA1
DOC NUMBER
DATE 2023/09/01

SHEET DESCRIPTION
MOLEX BACKSHELL CONFIGURATIONS



OVERALL MATED SYSTEM WITH BLADE AND RECEPTACLE BACKSHELL

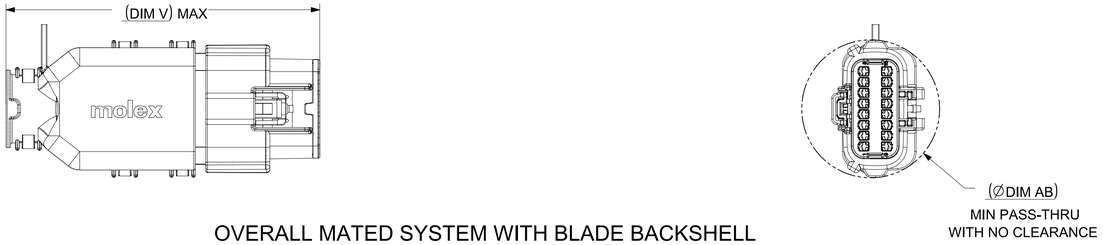

OVERALL MATED SYSTEM WITH BLADE BACKSHELL



OVERALL MATED SYSTEM WITH RECEPTACLE BACKSHELL

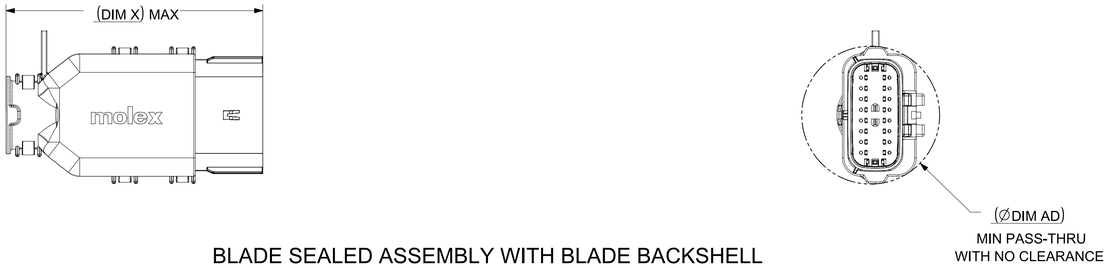

BLADE SEALED ASSEMBLY WITH BLADE BACKSHELL

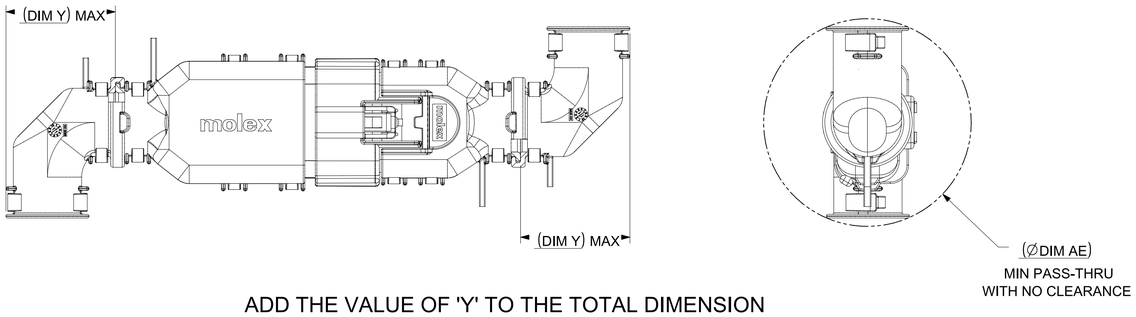

ADD THE VALUE OF 'Y' TO THE TOTAL DIMENSION
WHENEVER ADAPTOR IS USED

CHARTED DIMENSIONS

CKT	BLADE CONFIGURATION	RECEPTACLE CONFIGURATION	DIMENSIONS									
			U	V	W	X	Y	AA	AB	AC	AD	AE
2X4	STANDARD	STANDARD	115.24	94.36	93.93	75.62	32.10	32.93	32.54	32.85	31.76	56.81
2X8	STANDARD	STANDARD	132.49	102.81	102.73	84.07	36.10	45.44	45.44	42.65	45.44	68.18
2X10	STANDARD	STANDARD	132.49	102.81	102.73	84.07	36.10	45.44	45.44	42.65	45.44	68.18

THIS DRAWING CONTAINS INFORMATION THAT IS PROPRIETARY TO MOLEX ELECTRONIC TECHNOLOGIES, LLC AND SHOULD NOT BE USED WITHOUT WRITTEN PERMISSION

FUNCTIONAL SYMBOLS: FA = 0, FC = 0, FP = 0

DIVISIONAL SYMBOLS

DIMENSION UNITS	SCALE
mm	1:1

GENERAL TOLERANCES (UNLESS SPECIFIED)

ANGULAR TOL	± 1°
4 PLACES	±
3 PLACES	±
2 PLACES	± 0.100
1 PLACE	± 0.20
0 PLACES	±

DRAFT WHERE APPLICABLE MUST REMAIN WITHIN DIMENSIONS

CURRENT REV DESC:

STATUS: Production
DRWN: Yann Chen 2023-09-26
CHK'D: Yu Chao Fu 2023-09-26
APPR: Elvis Song 2023-09-27

THIRD ANGLE PROJECTION

DRAWING	SERIES
A1-SIZE	33482

molex

MX150 BLADE
DUAL ROW SEALED ASSEMBLY

PRODUCT SALES DRAWING

DOCUMENT NUMBER	DOC TYPE	DOC PART	REVISION
SD-33482-0001	PSD	001	E3

MATERIAL NUMBER	CUSTOMER	SHEET NUMBER
	GENERAL MARKET	11 OF 11