Connector Location A

Connector Location B

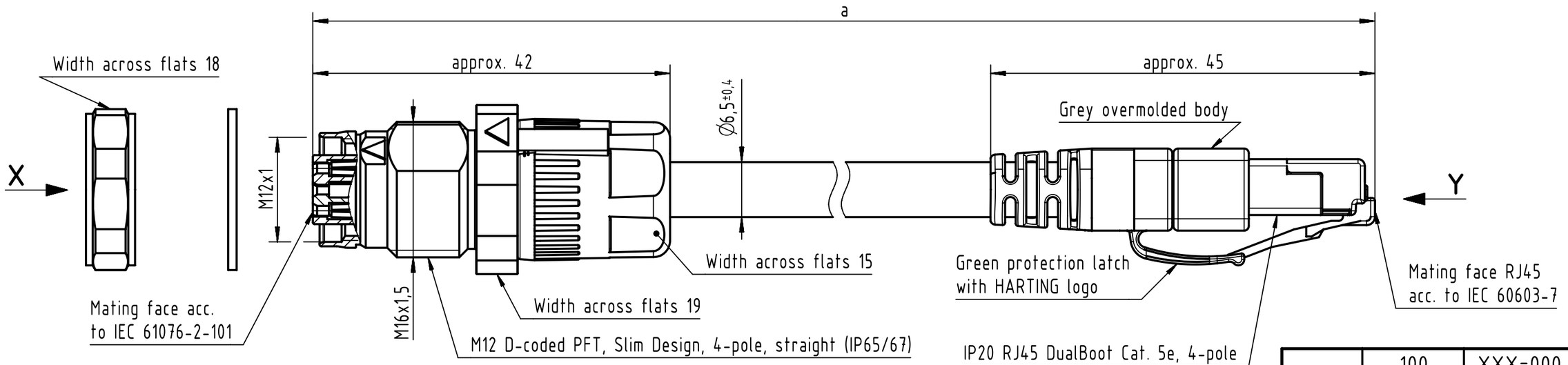

X
female
(without nut and seal)

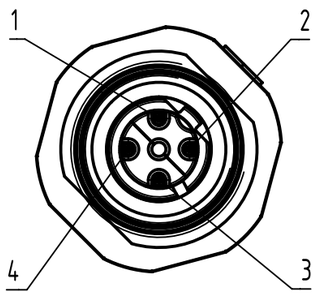

Y
male

Loading Plan

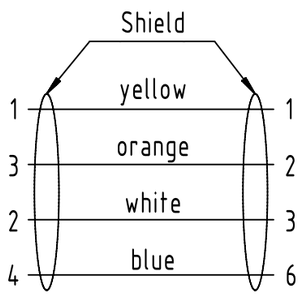

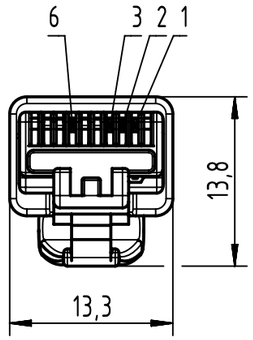

Panel cut out

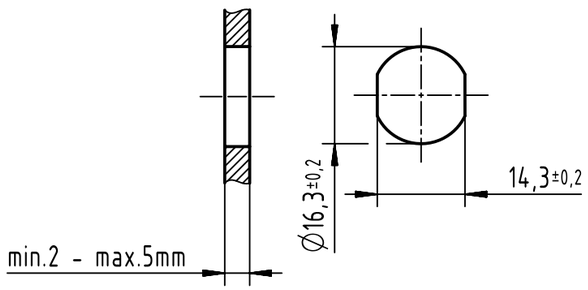

- Temperature range: -40°C ... +70°C
- Nut and seal pre-packaged in a separate poly-bag within the main poly-bag

length in "1m" step		
	100	XXX=000
	99	XXX=990
	. . .	. . .
	12	XXX=120
	11	XXX=110
length in "0.1m" step	10	XXX=100
	9.9	XXX=099
	9.8	XXX=098
	. . .	. . .
	0.5	XXX=005
	0.4	XXX=004
	0.3	XXX=003
	0.2	XXX=002
Step	**a [m]**	**XXX**

a [m]	Tolerance
6.0 to 100	±1%
0.6 to 5.9	+0.04
0.2 to 0.5	+0.02

HAR PROFINET Typ C 4xAWG 22/7 PUR Trail. green	09484568004XXX
Type of cable	**Part no.**

All Dimensions in mm	Tech. Character.	Free size tol.			According to production drawing
All rights reserved	Created by 407675 Lorinczi	Inspected by 402676 Gross	Standardisation MUNTEANV Muntean	Date 2023-06-15	State Final Release
Department HCS - RO	Title M12 D-Cod PFT female - RJ45 PUR				Doc-Key / ECM-Nr. 100874756/UGD/000/B 500000247580
HARTING Customised Solutions D-32339 Espelkamp	Type TB	Number 09484568004XXX		Rev. B	Page 1/1

A3