CUDEVICES

SERIES: TS20 | DESCRIPTION: TACTILE SWITCH

FEATURES

- surface mount
- 2.5 mm actuator height
- 4.2 x 3.2 mm

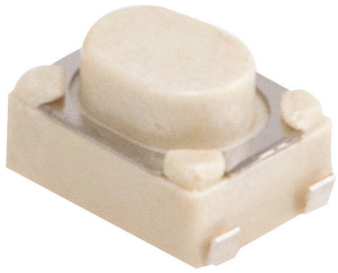

RoHS

SPECIFICATIONS

parameter	conditions/description	min	typ	max	units
rated voltage		1		12	Vdc
rated current		0.01		50	mA
withstanding voltage	for 1 minute		250		Vac
contact resistance	applying load of 2 times operating force at 5 Vdc, 10 mA			100	mΩ
insulation resistance	at 100 Vdc for 1 minute	100			MΩ
operating force	see force table				
actuator travel		0.10	0.20	0.30	mm
operating temperature		-40		90	°C
storage temperature		-40		90	°C
life	rated load, 2 cycles/second, 1.5 times operating force		100,000		cycles
vibration	10~55~10 Hz, 1.5 mm amplitude, 2 hours on each XYZ				
flammability rating	see material table				
RoHS	yes				

PART NUMBER KEY

TS20 - 42 - 25 - WT - 160 - SMT - TR

Base Number

MECHANICAL DRAWING

units: mm
tolerance: ±0.2 mm
unless otherwise noted

ITEM	DESCRIPTION	MATERIAL	PLATING/COLOR
1	terminals	phosphor copper	silver
2	housing	LCP (UL94V-0)	white
3	contacts	SUS	silver
4	cover	SUS	
5	stem	LCP (UL94V-0)	yellow

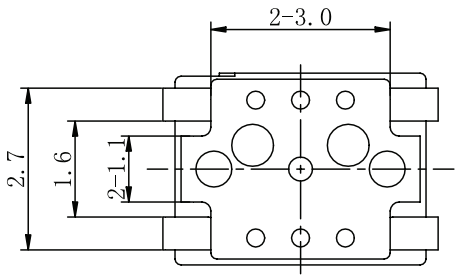

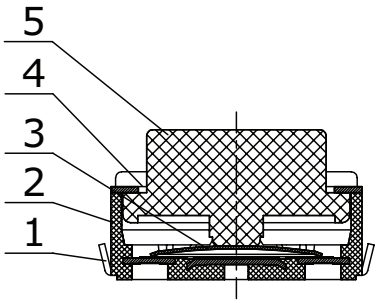

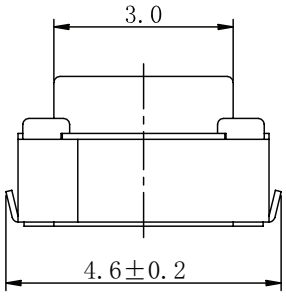

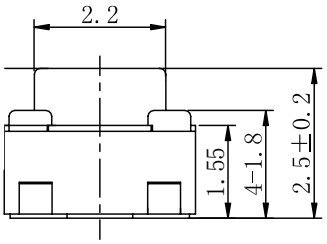

ACTUATOR POSITION [ ]: MOMENTARY	
NORMAL	DOWN
OFF	[ON]
SCHEMATIC	

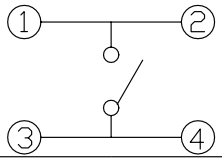

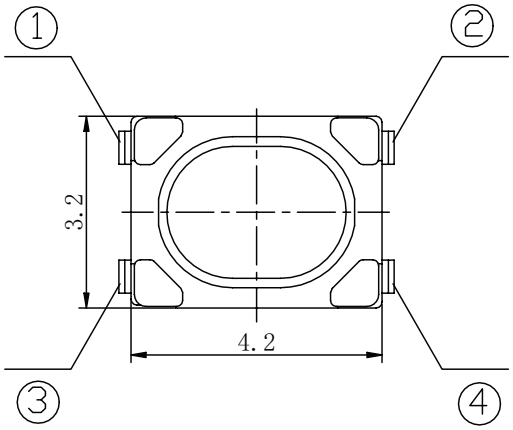

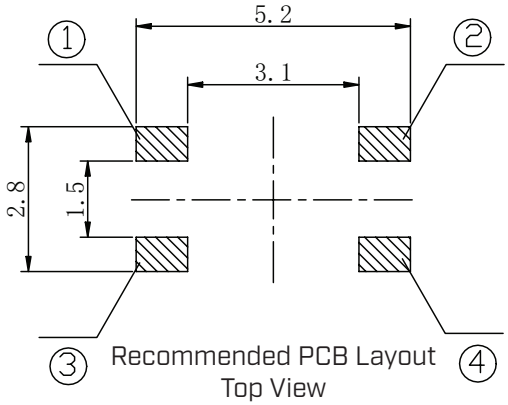

Recommended PCB Layout
Top View

Operating Force Table		
Model	Press Force (gf)	Return Force (gf)
160	160±50	>20

SOLDERABILITY

parameter	conditions/description	min	typ	max	units
hand soldering	for maximum 3 seconds			350	°C
reflow soldering[1]	see reflow profile			260	°C

Notes: 1. Do not exceed 2 reflow cycles.

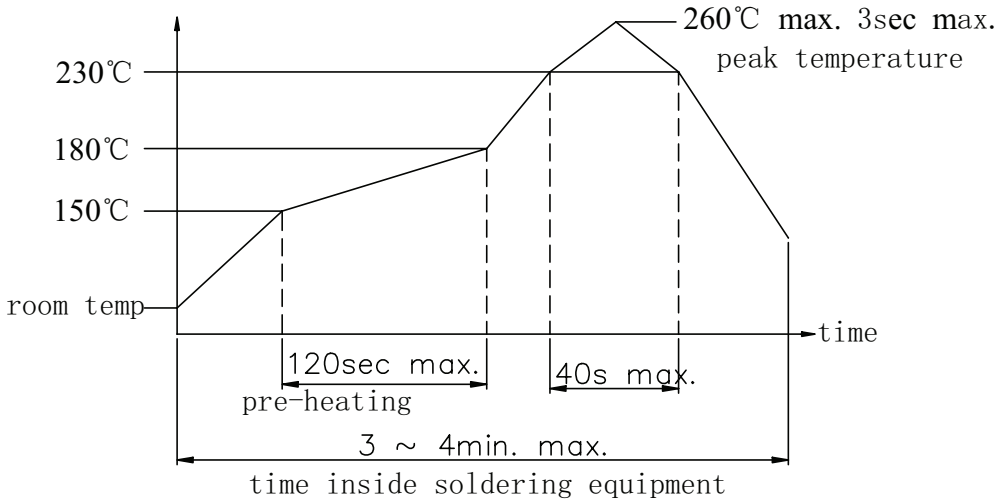

PACKAGING

units: mm

Reel Size: Ø380 mm
Reel QTY: 4,000 pcs per reel
Carton Size: 395 x 395 x 205 mm
Carton QTY: 40,000 pcs per carton

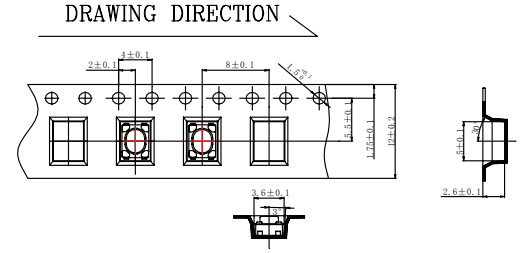

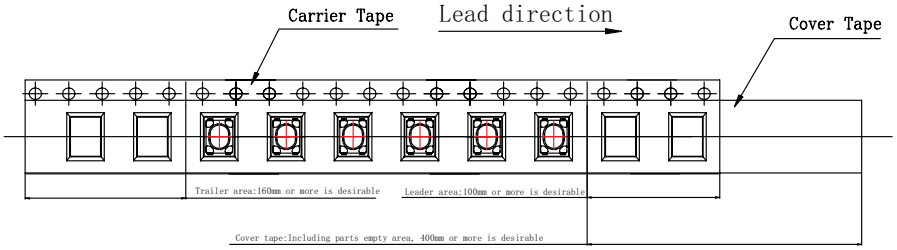

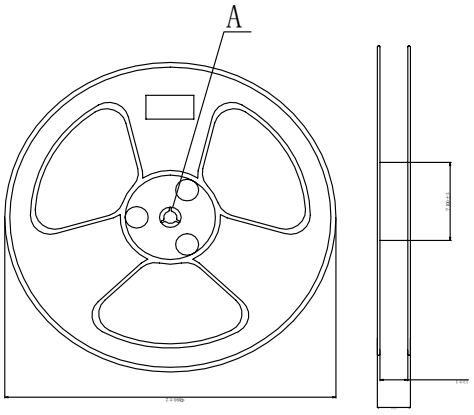

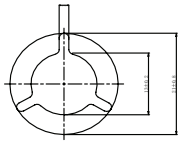

A Local Enlarge(5:1)

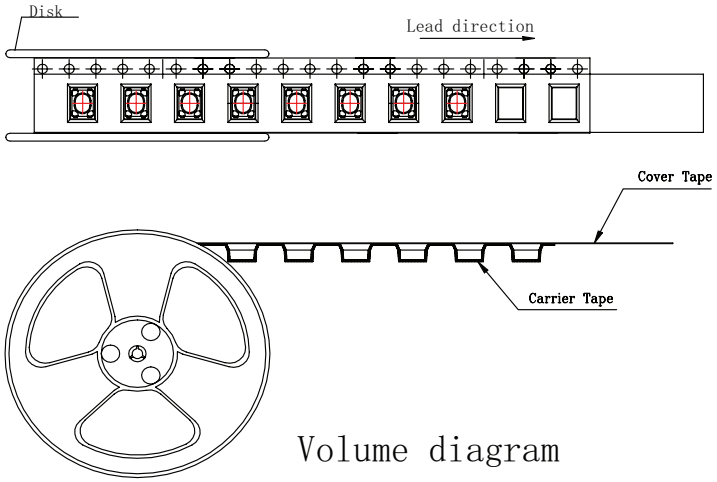

REVISION HISTORY

rev.	description	date
1.0	initial release	05/10/2022
1.01	logo, datasheet style update	08/05/2022

The revision history provided is for informational purposes only and is believed to be accurate.

CUI Devices offers a one (1) year limited warranty. Complete warranty information is listed on our website.

CUI Devices reserves the right to make changes to the product at any time without notice. Information provided by CUI Devices is believed to be accurate and reliable. However, no responsibility is assumed by CUI Devices for its use, nor for any infringements of patents or other rights of third parties which may result from its use.

CUI Devices products are not authorized or warranted for use as critical components in equipment that requires an extremely high level of reliability. A critical component is any component of a life support device or system whose failure to perform can be reasonably expected to cause the failure of the life support device or system, or to affect its safety or effectiveness.

cuidevices.com