HC-Q-I-RJ45-08-M - Contact insert

1077117

https://www.phoenixcontact.com/us/products/1077117

Please be informed that the data shown in this PDF document is generated from our online catalog. Please find the complete data in the user documentation. Our general terms of use for downloads are valid.



Contact insert, number of positions: RJ45, size: D7, type : RJ45, Pin, 50 V, 1 A, application: Data, With RJ45 contact insert

Commercial data

Item number	1077117
Packing unit	1 pc
Minimum order quantity	1 pc
Sales key	BF61
Product key	BF7ABJ
Catalog page	Page 513 (C-2-2019)
GTIN	4055626788814
Weight per piece (including packing)	11.2 g
Weight per piece (excluding packing)	9.5 g
Customs tariff number	85366990
Country of origin	CN

Technical data

Notes

General	Connectors may be operated only when there is no load/voltage.

Product properties

Product type	Contact insert with a fixed no. of positions
Series	HC-Q
Application	Data
Type	D7
Sensor type	Ethernet
Number of positions	8
Connection profile	RJ45
Type	RJ45

Insulation characteristics

Overvoltage category	III
Degree of pollution	3

Dimensions

Dimensional drawing	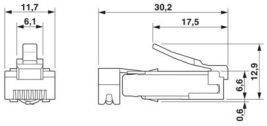
Width	21 mm
Height	22 mm
Length	21 mm

Connection data

Connection technology

Connection in acc. with standard	IEC / EN

Conductor connection

Connection cross section AWG	24 ... 27 (flexible)
Tightening torque	0.5 Nm ... 0.8 Nm (Mounting screws for mounting in the HEAVYCON housing)

Electrical properties

Rated voltage (III/3)	50 V
Rated surge voltage	0.8 kV
Rated current	1 A
Nominal voltage U_N	50 V
Transmission characteristics (category)	$CAT6_A$ (IEC 60512-27-100:2008, TIA-568-C.2:2009)

Material specifications

Flammability rating according to UL 94	V0
Contact material	Copper alloy
Contact surface material	Au
Contact carrier material	PC
Standards/regulations	PC: Fire protection in rail vehicles - requirement sets R22, R23, and R24 acc. to DIN EN 45545-2 (Risk level HL1 - HL3)

Environmental and real-life conditions

Ambient conditions

Ambient temperature (operation)	-25 °C ... 60 °C

Standards and regulations

Testing

Standards/regulations	PC: Fire protection in rail vehicles - requirement sets R22, R23, and R24 acc. to DIN EN 45545-2 (Risk level HL1 - HL3)

Drawings

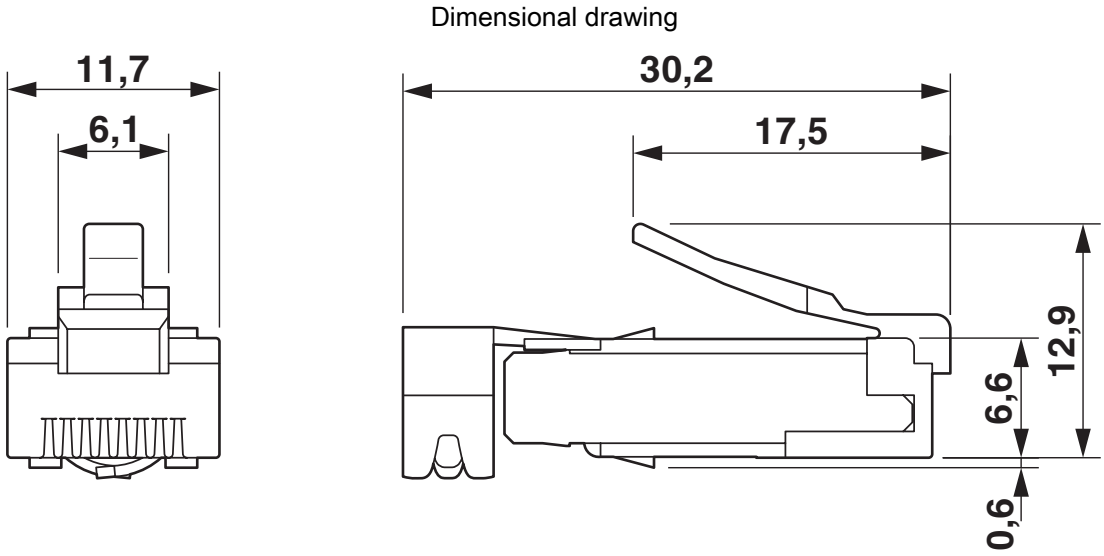

RJ45 male insert

Approvals

To download certificates, visit the product detail page: https://www.phoenixcontact.com/us/products/1077117

EAC
Approval ID: RU C-DE.BL08.B.00511

Classifications

ECLASS

ECLASS-11.0	27440205
ECLASS-12.0	27440205
ECLASS-13.0	27440205

ETIM

ETIM 9.0	EC000438

UNSPSC

UNSPSC 21.0	39121500

Environmental product compliance

EU RoHS

Fulfills EU RoHS substance requirements	Yes, No exemptions

China RoHS

Environment friendly use period (EFUP)	EFUP-E
	No hazardous substances above the limits

EU REACH SVHC

REACH candidate substance (CAS No.)	No substance above 0.1 wt%

Accessories

HC-D 7-DS-IP65 - Sealing screw

1686229

https://www.phoenixcontact.com/us/products/1686229



Sealing screw, size: Countersunk head, IP67, replacement part for D7 size HEAVYCON housing

VS-08-RJ45-10G/C - RJ45 male insert

1418853

https://www.phoenixcontact.com/us/products/1418853



Male insert RJ45, CAT6$_A$, 10 Gigabit

HC-Q-I-RJ45-08-M - Contact insert

1077117

https://www.phoenixcontact.com/us/products/1077117

HC-Q-I-RJ45 GC-F/F - Contact insert

1422590

https://www.phoenixcontact.com/us/products/1422590



Contact insert, number of positions: RJ45, size: D7, type : RJ45, Socket, 50 V, 1 A, application: Data, Gender changer

VS-CT-RJ45-H - Crimping pliers

1653265

https://www.phoenixcontact.com/us/products/1653265



Crimp tool, pliers with die, for RJ45 pin inserts VS-08-ST-H...-RJ45 and VS-08-RJ45-10G/C

Phoenix Contact 2024 © - all rights reserved
https://www.phoenixcontact.com

Phoenix Contact USA
586 Fulling Mill Road
Middletown, PA 17057, United States
(+717) 944-1300
info@phoenixcon.com