Data sheet



AHM36B-BDCL012x12

AHS/AHM36

ABSOLUTE ENCODERS

SICK
Sensor Intelligence.



Illustration may differ

Ordering information

Type	part no.
AHM36B-BDCL012x12	1092620

Other models and accessories ➜ www.sick.com/AHS_AHM36

Detailed technical data

Safety-related parameters

$MTTF_D$ (mean time to dangerous failure)	270 years (EN ISO 13849-1) [1]

[1] This product is a standard product and does not constitute a safety component as defined in the Machinery Directive. Calculation based on nominal load of components, average ambient temperature 40 °C, frequency of use 8760 h/a. All electronic failures are considered hazardous. For more information, see document no. 8015532.

Performance

Number of steps per revolution (max. resolution)	4,096 (12 bit)
Number of revolutions	4,096 (12 bit)
Max. resolution (number of steps per revolution x number of revolutions)	12 bit x 12 bit (4,096 x 4,096)
Error limits G	0.35° (at 20 °C) [1]
Repeatability standard deviation σ_r	0.25° (at 20 °C) [2]

[1] In accordance with DIN ISO 1319-1, position of the upper and lower error limit depends on the installation situation, specified value refers to a symmetrical position, i.e. deviation in upper and lower direction is the same.
[2] In accordance with DIN ISO 55350-13; 68.3% of the measured values are inside the specified area.

Interfaces

Communication interface	CANopen
Data protocol	CANopen CiA DS-301 V4.02, CiA DSP-305 LSS, Encoder Profile: - CIA DS-406, V3.2. - Class C2
Address setting	0 ... 127, default: 5
Data transmission rate (baud rate)	20 kbit/s ... 1,000 kbit/s, default: 125 kbit/s
Initialization time	2 s [1]

[1] Valid positional data can be read once this time has elapsed.
[2] See accessories.

Process data	Position, speed, Temperature
Parameterising data	Number of steps per revolution Number of revolutions PRESET Counting direction Sampling rate for speed calculation Unit for output of the speed value Round axis functionality
Status information	CANopen status via status LED
Bus termination	Via external terminator [2]

[1] Valid positional data can be read once this time has elapsed.

[2] See accessories.

Electronics

Connection type	Cable, 5-wire, universal, 3 m
Supply voltage	10 ... 30 V
Power consumption	≤ 1.5 W (without load)
Reverse polarity protection	✓

Mechanics

Mechanical design	Blind hollow shaft
Shaft diameter	10 mm
Characteristics of the shaft	Front clamp
Weight	0.12 kg [1]
Shaft material	Stainless steel
Flange material	Aluminum
Housing material	Zinc
Material, cable	PUR
Start up torque	0.5 Ncm (+20 °C)
Operating torque	< 0.5 Ncm (+20 °C)
Permissible movement static	± 0.3 mm, ± 0.3 mm (radial, axial)
Permissible movement dynamic	± 0.1 mm (radial) ± 0.1 mm (axial)
Operating speed	≤ 6,000 min^{-1} [2]
Moment of inertia of the rotor	15 gcm^2
Bearing lifetime	2.0 x 10^9 revolutions
Angular acceleration	≤ 500,000 rad/s^2

[1] Based on devices with male connector.

[2] Allow for self-heating of 3.5 K per 1,000 rpm when designing the operating temperature range.

Ambient data

EMC	According to EN 61000-6-2 and EN 61000-6-3
Enclosure rating	IP65 (IEC 60529)
Permissible relative humidity	90 % (Condensation not permitted)
Operating temperature range	–20 °C ... +70 °C
Storage temperature range	–40 °C ... +100 °C, without package

Resistance to shocks	100 g, 6 ms (EN 60068-2-27)
Resistance to vibration	20 g, 10 Hz ... 2,000 Hz (EN 60068-2-6)

Classifications

ECLASS 5.0	27270502
ECLASS 5.1.4	27270502
ECLASS 6.0	27270590
ECLASS 6.2	27270590
ECLASS 7.0	27270502
ECLASS 8.0	27270502
ECLASS 8.1	27270502
ECLASS 9.0	27270502
ECLASS 10.0	27270502
ECLASS 11.0	27270502
ECLASS 12.0	27270502
ETIM 5.0	EC001486
ETIM 6.0	EC001486
ETIM 7.0	EC001486
ETIM 8.0	EC001486
UNSPSC 16.0901	41112113

Certificates

EU declaration of conformity	✓
UK declaration of conformity	✓
ACMA declaration of conformity	✓
Moroccan declaration of conformity	✓
China-RoHS	✓
cTUVus certificate	✓
CANopen certificate	✓
ECE test certificate	✓
Information according to Art. 3 of Data Act (Regulation EU 2023/2854)	✓

Dimensional drawing Blind hollow shaft, cable

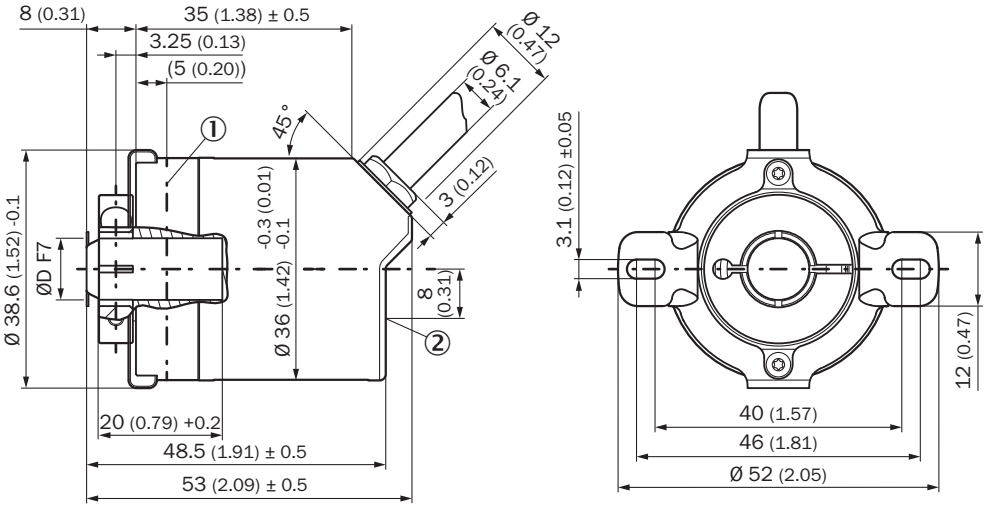

Dimensions in mm (inch)
① Measuring point for operating temperature
② measuring point for vibrations

Type	Shaft diameterØ D F7
AHx36x-BAxxxxxxxx	6 mm
AHx36x-BBxxxxxxxx	8 mm
AHx36x-BCxxxxxxxx	1/4″
AHx36x-BDxxxxxxxx	10 mm
AHx36x-BKxxxxxxxx	3/8″

Attachment specifications

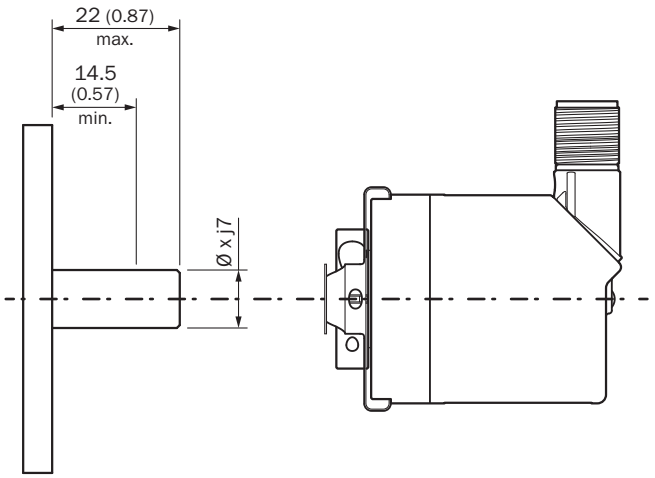

PIN assignment

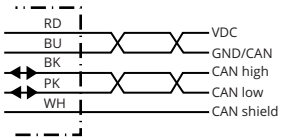

PIN	Signal	Wire colors (cable connection)	Function
1	CAN Shield	White	Screen
2	VDC	Red	Supply voltageEn-coder10 V DC ... 30 V DC
3	GND/CAN GND	Blue	0 V (GND)
4	CAN high	Black	CAN signal
5	CAN low	Pink	CAN signal
Housing	-	-	Screen

Recommended accessories

Other models and accessories ➜ www.sick.com/AHS_AHM36

	Brief description	Type	part no.
programming devices			
	• **Product segment:** Programming devices • **Product family:** PGT-12 Pro • **Description:** Hand-held programming device for the programmable SICK AHS/AHM36 CANopen encoders, TMS/TMM61 CANopen inclination sensors, TMS/TMM88 CANopen, TMS/TMM88 Analog, and wire draw encoders with AHS/AHM36 CANopen. Compact dimensions, low weight, and intuitive operation. • **Items supplied:** 1 x PGT-12-Pro standalone programming tool, 4 x 1.5 V (AA) alkaline mignon batteries	PGT-12-Pro	1076313

	Brief description	Type	part no.
connectors and cables			
	• **Connection type head A:** Flying leads • **Connection type head B:** Flying leads • **Signal type:** CANopen, DeviceNet™ • **Items supplied:** By the meter • **Cable:** 4-wire, twisted pair • **Description:** CANopen, shielded, DeviceNet™ • **Note:** Wire shield Al-Pt film, overall shield C-screen tin-plated	LTG-2804-MW	6028328
	• **Connection type head A:** Female connector, M12, 5-pin, straight, A-coded • **Signal type:** CANopen, DeviceNet™ • **Description:** CANopen, shieldedDeviceNet™ • **Connection systems:** Screw-type terminals • **Permitted cross-section:** ≤ 0.75 mm²	DOS-1205-GA	6027534
	• **Connection type head A:** Male connector, M12, 5-pin, straight, A-coded • **Signal type:** CANopen, DeviceNet™ • **Description:** CANopen, shieldedDeviceNet™ • **Connection systems:** Screw-type terminals • **Permitted cross-section:** ≤ 0.75 mm²	STE-1205-GA	6027533
	• **Connection type head A:** Male connector, M12, 5-pin, straight • **Signal type:** CANopen • **Description:** CANopen, unshielded	CAN male connector	6021167
	• **Connection type head A:** Female connector, M12, 5-pin, A-coded • **Connection type head B:** Female connector, M12, 5-pin, A-coded • **Connection type head C:** Male connector, M12, 5-pin, A-coded • **Description:** Unshielded	DSC-1205T000025KM0	6030664
	• **Connection type head A:** Female connector, M12, 5-pin, straight, A-coded • **Connection type head B:** Flying leads • **Signal type:** Fieldbus, CANopen, DeviceNet™ • **Cable:** 2 m, 4-wire, PUR, halogen-free • **Description:** Fieldbus, shieldedCANopenDeviceNet™ • **Application:** Drag chain operation, Zones with oils and lubricants	YF2A15-020C1BXLEAX	2106283
	• **Connection type head A:** Female connector, M12, 5-pin, straight, A-coded • **Connection type head B:** Flying leads • **Signal type:** Fieldbus, CANopen, DeviceNet™ • **Cable:** 5 m, 4-wire, PUR, halogen-free • **Description:** Fieldbus, shieldedCANopenDeviceNet™ • **Application:** Drag chain operation, Zones with oils and lubricants	YF2A15-050C1BXLEAX	2106284
	• **Connection type head A:** Female connector, M12, 5-pin, straight, A-coded • **Connection type head B:** Flying leads • **Signal type:** Fieldbus, CANopen, DeviceNet™ • **Cable:** 10 m, 4-wire, PUR, halogen-free • **Description:** Fieldbus, shieldedCANopenDeviceNet™ • **Application:** Drag chain operation, Zones with oils and lubricants	YF2A15-100C1BXLEAX	2106286
	• **Connection type head A:** Female connector, M12, 5-pin, straight, A-coded • **Connection type head B:** Male connector, M12, 5-pin, straight, A-coded • **Signal type:** Fieldbus, CANopen, DeviceNet™ • **Cable:** 2 m, 4-wire, PUR, halogen-free • **Description:** Fieldbus, shieldedCANopenDeviceNet™ • **Application:** Drag chain operation, Zones with oils and lubricants	YF2A15-020C1B-M2A15	2106279
	• **Connection type head A:** Female connector, M12, 5-pin, straight, A-coded • **Connection type head B:** Male connector, M12, 5-pin, straight, A-coded • **Signal type:** Fieldbus, CANopen, DeviceNet™ • **Cable:** 5 m, 4-wire, PUR, halogen-free • **Description:** Fieldbus, shieldedCANopenDeviceNet™ • **Application:** Drag chain operation, Zones with oils and lubricants	YF2A15-050C1B-M2A15	2106281
	• **Connection type head A:** Female connector, M12, 5-pin, straight, A-coded • **Connection type head B:** Male connector, M12, 5-pin, straight, A-coded • **Signal type:** Fieldbus, CANopen, DeviceNet™ • **Cable:** 10 m, 4-wire, PUR, halogen-free • **Description:** Fieldbus, shieldedCANopenDeviceNet™ • **Application:** Drag chain operation, Zones with oils and lubricants	YF2A15-100C1B-M2A15	2106282
	• **Connection type head A:** Female connector, M12, 5-pin, A-coded • **Connection type head B:** Female connector, M12, 5-pin, A-coded • **Connection type head C:** Male connector, M12, 5-pin, A-coded • **Cable:** 0.5 m, TPU	Y-CAN cable	6083185

	Brief description	Type	part no.
	• **Description:** Shielded		
	• **Connection type head A:** Female connector, terminal box, 8-pin, straight • **Connection type head B:** Female connector, D-Sub, 9-pin, straight • **Signal type:** CANopen • **Cable:** 0.4 m • **Description:** CANopen, shielded	DDL-0D04-G0M5BC9	2083355
Mounting systems			
	• **Product family:** Stator couplings • **Description:** Stator coupling on hole circle 63 mm	BEF-DS08	2072206
	• **Product family:** Stator couplings • **Description:** Standard stator coupling, AHS/AHM36	BEF-DS16-AHX	2108615

SICK AT A GLANCE

SICK is one of the leading manufacturers of intelligent sensors and sensor solutions for industrial applications. A unique range of products and services creates the perfect basis for controlling processes securely and efficiently, protecting individuals from accidents and preventing damage to the environment.

We have extensive experience in a wide range of industries and understand their processes and requirements. With intelligent sensors, we can deliver exactly what our customers need. In application centers in Europe, Asia and North America, system solutions are tested and optimized in accordance with customer specifications. All this makes us a reliable supplier and development partner.

Comprehensive services complete our offering: SICK LifeTime Services provide support throughout the machine life cycle and ensure safety and productivity.

For us, that is “Sensor Intelligence.”

WORLDWIDE PRESENCE:

Contacts and other locations –www.sick.com