180924 ✔ ACTIVE

FASTIN-FASTON | FASTIN-FASTON 250

TE Internal #: 180924

Crimp Terminal Housings, Tab, Tab Housing, 2 Position, Straight, UL 94V-0, Natural, Polyamide, Contact Mating Retention, FASTIN-FASTON 250

View on TE.com >

Terminals & Splices > Terminal Housings, Insulation Sleeves & Blocks > Crimp Terminal Housings

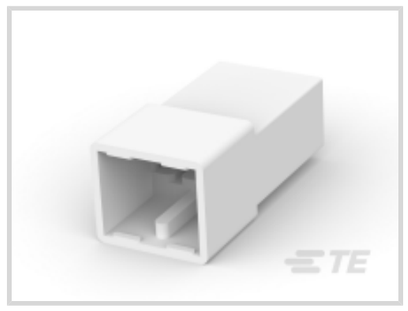





Terminal Type: **Tab**

Connector & Housing Type: **Tab Housing**

Number of Positions: **2**

Terminal Orientation: **Straight**

UL Flammability Rating: **UL 94V-0**

Features

Product Type Features

Sealable	No
Connector & Contact Terminates To	Wire & Cable
Connector & Housing Type	Tab Housing

Configuration Features

Number of Positions	2

Body Features

Primary Product Color	Natural

Contact Features

Terminal Type	Tab
Terminal Orientation	Straight
Contact Mating Retention	With

Mechanical Attachment

Mating Retention Type	Latch

Mating Alignment	With
Connector Mounting Type	Cable Mount (Free-Hanging)

Housing Features

Housing Material	Polyamide
Centerline (Pitch)	6.35 mm[.25 in]

Dimensions

Product Length	31.8 mm[1.25 in]

Usage Conditions

Operating Temperature Range	-40 – 105 °C[-40 – 221 °F]

Industry Standards

UL Flammability Rating	UL 94V-0

Packaging Features

Packaging Quantity	3500
Packaging Method	Carton

Product Compliance

For compliance documentation, visit the product page on TE.com>

EU RoHS Directive 2011/65/EU	Compliant
EU ELV Directive 2000/53/EC	Compliant
China RoHS 2 Directive MIIT Order No 32, 2016	No Restricted Materials Above Threshold
EU REACH Regulation (EC) No. 1907/2006	Current ECHA Candidate List: JAN 2024 (240) Candidate List Declared Against: JAN 2024 (240) Does not contain REACH SVHC
Halogen Content	Low Halogen - Br, Cl, F, I < 900 ppm per homogenous material. Also BFR/CFR/PVC Free
Solder Process Capability	Not applicable for solder process capability

Product Compliance Disclaimer

This information is provided based on reasonable inquiry of our suppliers and represents our current actual knowledge based on the information they provided. This information is subject to change. The part numbers that TE has identified as EU RoHS compliant have a maximum concentration of 0.1% by weight in homogenous materials for lead, hexavalent chromium, mercury, PBB, PBDE, DBP, BBP, DEHP, DIBP, and 0.01% for cadmium, or qualify for an exemption to these limits as defined in the Annexes of Directive 2011/65/EU (RoHS2). Finished electrical and electronic equipment products will be CE marked as required by Directive 2011/65/EU. Components may not be CE marked. Additionally, the part numbers that TE has identified as EU ELV compliant have a maximum concentration of 0.1% by weight in homogenous materials for lead, hexavalent chromium, and mercury, and 0.01% for cadmium, or qualify for an exemption to these limits

as defined in the Annexes of Directive 2000/53/EC (ELV). Regarding the REACH Regulation, the information TE provides on SVHC in articles for this part number is based on the latest European Chemicals Agency (ECHA) 'Guidance on requirements for substances in articles' posted at this URL: https://echa.europa.eu/guidance-documents/guidance-on-reach

Compatible Parts

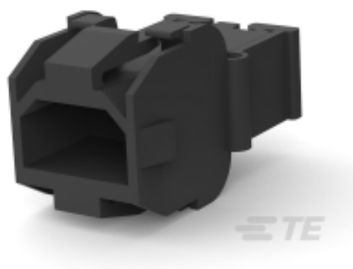

TE Part # 964586-1
FF 2P HOUSING TAB POLYESTER VALOX 357



TE Part # 170340-1
FF 250 TAB 20-14AWG BR WITHOUT LATCH



TE Part # 170341-3
FF 250 TAB 14-12AWG PTBR WITHOUT LATCH



TE Part # 170349-2
FF 250 TAB 22-20AWG TPBR WITHOUT LATCH



TE Part # 170340-3
FF 250 TAB 20-14AWG PTBR WITHOUT LATCH



TE Part # 170341-1
FF 250 TAB 14-12AWG BR WITHOUT LATCH



TE Part # 928193-1
FF 2.8MM TAB HSG 2P PBT BLACK



TE Part # 1-626065-2
FF 110 2P HOUSING TAB NATURAL PA6.6 V-0



TE Part # 626065-5
HOUSING 2P .110 FASTIN-ON TAB



TE Part # 170349-1
FF 250 TAB 22-20AWG BR WITHOUT LATCH



TE Part # 4-1377175-4
SMP 0-0180924-0

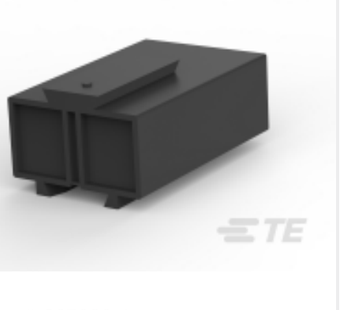

TE Part # 927203-1
FF 250 TAB HSG 2P NYLON BLACK



TE Part # 927670-1
FF 203 TAB HSG 16P NYLON NAT

Also in the Series | FASTIN-FASTON 250



Crimp Terminal Housings(211)



Insertion & Extraction Tools(2)



PCB Terminals(2)

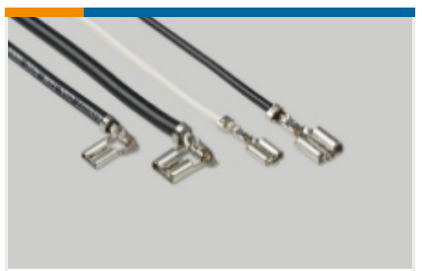

Quick Disconnects(254)

Customers Also Bought

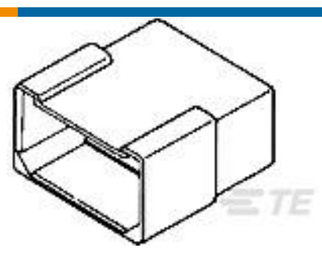

TE Part #180906
FF 250 TAB HSG 6P NYLON NAT

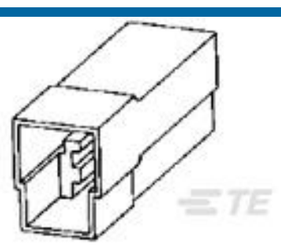

TE Part #180940
FF 250 TAB HSG 3P NYLON NAT

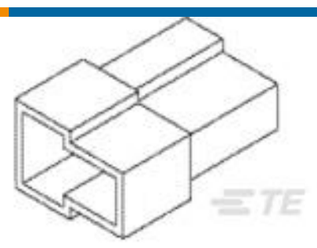

TE Part #180908
FF 250 TAB HSG 2P NYLON NAT

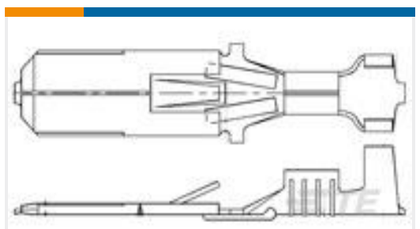

TE Part #170151-2
FF 250 TAB 18-14AWG PTBR



TE Part #1-1879353-2
RR02 5% 12K AMMO

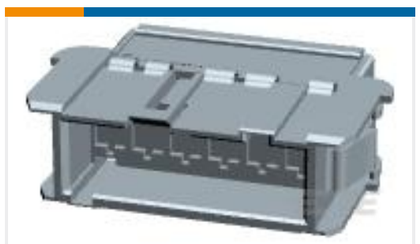

TE Part #7-927742-6
6 POS. FASTIN-FASTON* TAB HSG RAST5

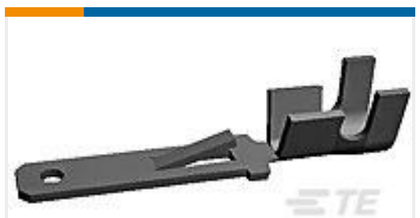

TE Part #160458-2
FF 250 TAB 18-16AWG TPPB LP



TE Part #2-2119582-6
Crimper, Insulation F Premium



TE Part #2266113-1
OCEAN_2.0_APPLICATOR-S-103F110O-RSM



TE Part #7-2266126-7
OCEAN_2.0_SPARE_PART_KIT-117F114O

Documents

Product Drawings

FF 250 TAB HSG 2P NYLON NAT

English

CAD Files

3D PDF

3D

Customer View Model

ENG_CVM_CVM_180924_AM.2d_dxf.zip

English

Customer View Model

ENG_CVM_CVM_180924_AM.3d_igs.zip

English

Customer View Model

ENG_CVM_CVM_180924_AM.3d_stp.zip

English

By downloading the CAD file I accept and agree to the Terms and Conditions of use.

Datasheets & Catalog Pages

FASTIN_FASTON_Product_Line

English

White Paper: Nylon Discoloration

English

Product Specifications

Application Specification

English

Agency Approvals

UL Report

English