VS-BH-M12FSX-10G-RJ45/180 - Control cabinet feed-through

1404549

https://www.phoenixcontact.com/us/products/1404549

Please be informed that the data shown in this PDF document is generated from our online catalog. Please find the complete data in the user documentation. Our general terms of use for downloads are valid.



Control cabinet feed-through, M12, 8-pos., X-coded to RJ45 socket, socket input 180°, IP65/67

Your advantages

- Compact design

Commercial data

Item number	1404549
Packing unit	1 pc
Minimum order quantity	1 pc
Sales key	AB18
Product key	ABNPBC
Catalog page	Page 348 (C-2-2019)
GTIN	4046356699426
Weight per piece (including packing)	36.5 g
Weight per piece (excluding packing)	36.5 g
Customs tariff number	85366990
Country of origin	DE

Technical data

Product properties

Product type	Female insert
Type	M12
Sensor type	Ethernet
Number of positions	8
Connection profile	M12
Number of slots	1
Shielded	yes
Cable outlet	straight
Thread type	M12

Insulation characteristics

Overvoltage category	III
Degree of pollution	2

Electrical properties

Maximum load current	0.5 A
Rated voltage (III/3)	72 V (DC)
Rated surge voltage	0.8 kV
Rated current	1.75 A
Nominal voltage U_N	48 V
Nominal current I_N	0.5 A
Transmission medium	Copper
Transmission characteristics (category)	$CAT6_A$
Power transmission	PoE++

Connection data

Connection technology

Connection method	Coupling

Material specifications

Color	black
Flammability rating according to UL 94	V0
Housing material	Plastic
Material of grip body	PA
Contact material	Copper alloy

Connector

Connection 1

Type	Socket M12
Locking type	Screw connection

Coding type	X
Shielded	yes
Insertion/withdrawal cycles	≥ 750 (RJ45)
Degree of protection	IP65/IP67

Connection 2

Type	Socket RJ45
Degree of protection	IP20

Mechanical properties

Mechanical data

Insertion/withdrawal cycles	≥ 100

Environmental and real-life conditions

Ambient conditions

Degree of protection	IP65
	IP67
	IP65/IP67, when installed
Ambient temperature (operation)	-25 °C ... 85 °C
Ambient temperature (storage/transport)	-25 °C ... 85 °C

Mounting

Mounting type	Rear mounting

Drawings

Dimensional drawing

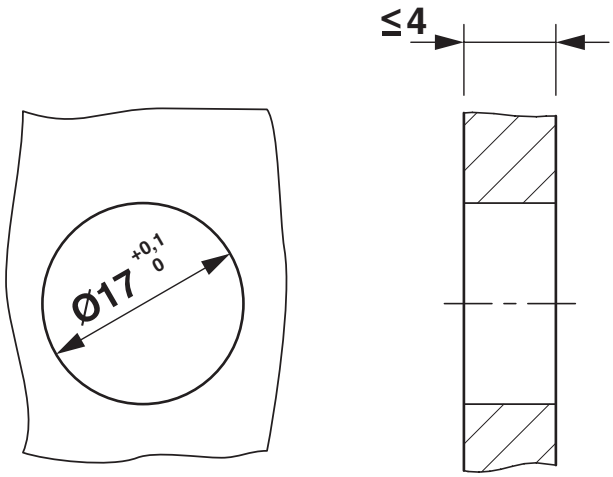

Mounting cutout

Schematic diagram

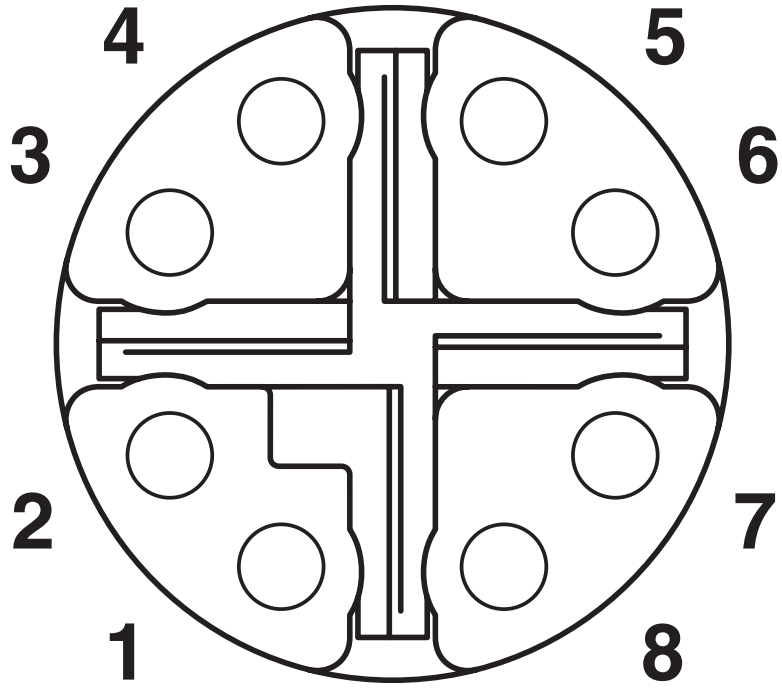

Pin assignment of M12 female, 8-pos., X-coded, view: female side

VS-BH-M12FSX-10G-RJ45/180 - Control cabinet feed-through

1404549

https://www.phoenixcontact.com/us/products/1404549

Circuit diagram

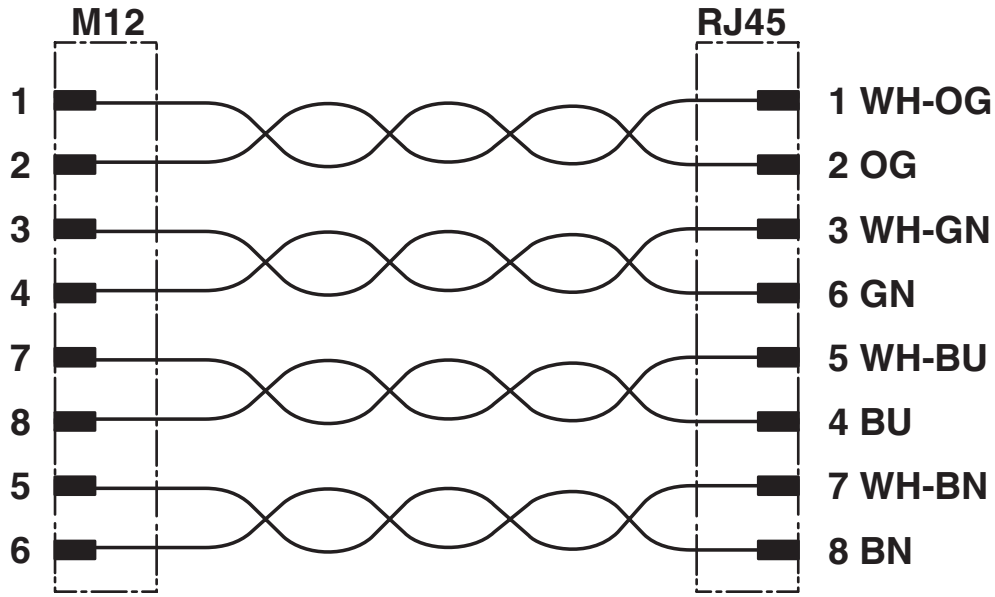

Exploded view

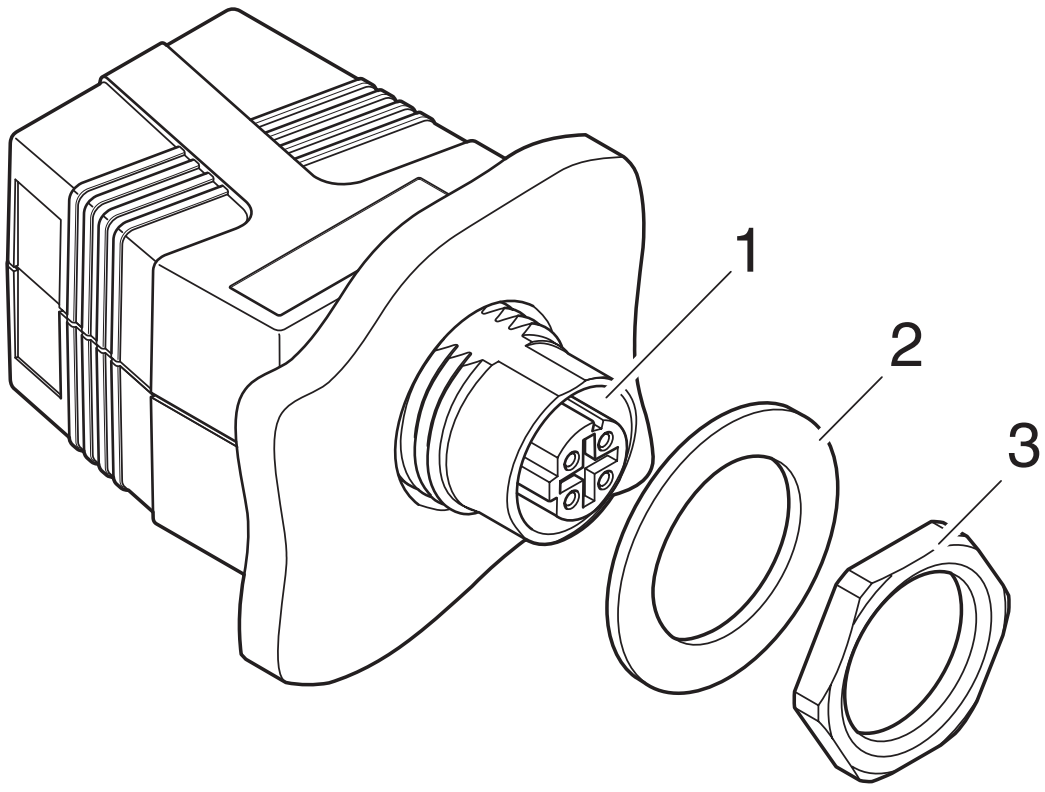

Exploded drawing

VS-BH-M12FSX-10G-RJ45/180 - Control cabinet feed-through

1404549

https://www.phoenixcontact.com/us/products/1404549

Dimensional drawing

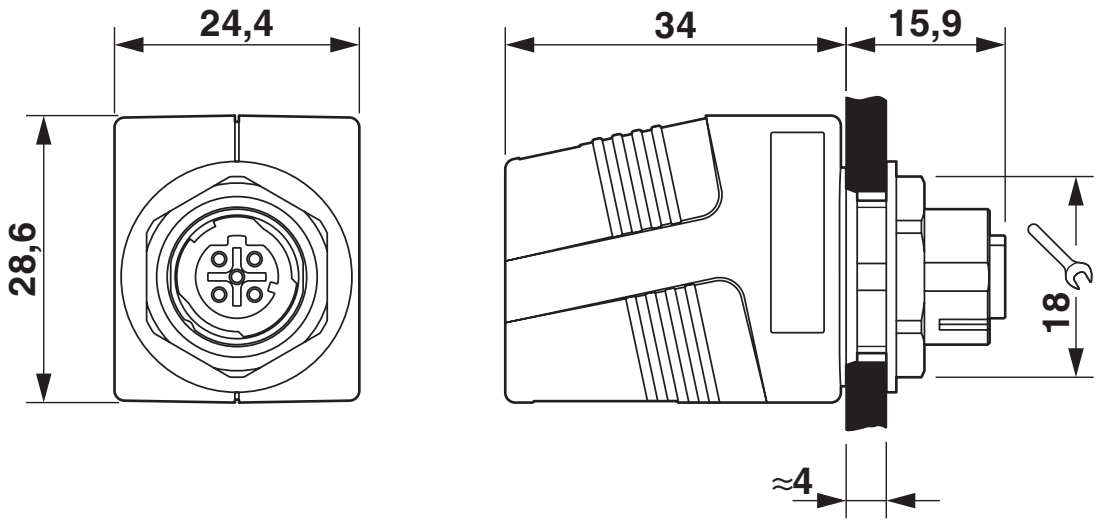

Schematic diagram

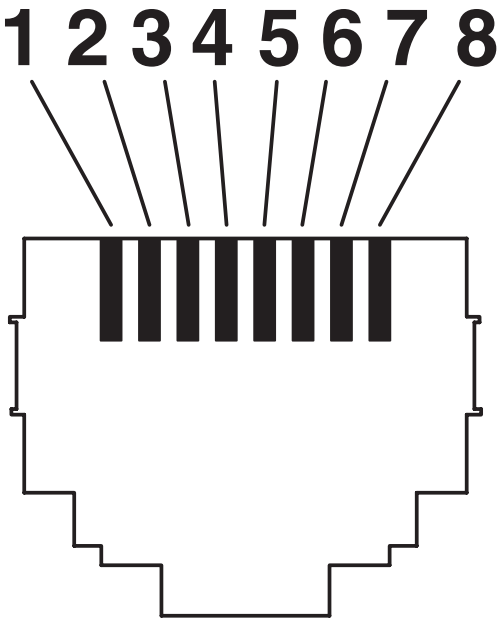

RJ45 socket insert

Approvals

To download certificates, visit the product detail page: https://www.phoenixcontact.com/us/products/1404549

UL Listed
Approval ID: E335024-20140306

	Nominal voltage U_N	Nominal current I_N	Cross section AWG	Cross section mm^2
	60 V	0.5 A	-	-

cUL Listed
Approval ID: E335024-20140306

	Nominal voltage U_N	Nominal current I_N	Cross section AWG	Cross section mm^2
	60 V	0.5 A	-	-

cULus Listed

Classifications

ECLASS

ECLASS-11.0	27440312
ECLASS-12.0	27440312
ECLASS-13.0	27440312

ETIM

ETIM 9.0	EC002641

UNSPSC

UNSPSC 21.0	39121400

Environmental product compliance

EU RoHS

Fulfills EU RoHS substance requirements	Yes
Exemption	6(c)

China RoHS

Environment friendly use period (EFUP)	EFUP-50
	An article-related China RoHS declaration table can be found in the download area for the respective article under "Manufacturer declaration". For all articles with EFUP-E, no China RoHS declaration table issued and required.

EU REACH SVHC

REACH candidate substance (CAS No.)	Lead(CAS: 7439-92-1)

Phoenix Contact 2024 © - all rights reserved
https://www.phoenixcontact.com

Phoenix Contact USA
586 Fulling Mill Road
Middletown, PA 17057, United States
(+717) 944-1300
info@phoenixcon.com