Data sheet



BTF13-E1BM1099

HighLine

WIRE DRAW ENCODERS

SICK
Sensor Intelligence.



Ordering information

Type	part no.
BTF13-E1BM1099	1060994

Included in delivery: AFM60A-S1EB018x12 (1), MRA-F130-110D2 (1)

Other models and accessories → www.sick.com/HighLine

Detailed technical data

Safety-related parameters

$MTTF_D$ (mean time to dangerous failure)	80 years (EN ISO 13849-1) [1]

[1] This product is a standard product and does not constitute a safety component as defined in the Machinery Directive. Calculation based on nominal load of components, average ambient temperature 40 °C, frequency of use 8760 h/a. All electronic failures are considered hazardous. For more information, see document no. 8015532.

Performance

Measurement range	0 m ... 10 m
Encoder	Absolute encoders
Resolution (wire draw + encoder)	0.001 mm [1] [2]
Repeatability	≤ 1.5 mm [3]
Linearity	≤ ± 2 mm [3]
Hysteresis	≤ 3 mm [3]

[1] The values shown have been rounded.

[2] Example calculation based on the BTF08 with PROFINET: 200 mm (wire draw length per revolution - see Mechanical data): 262,144 (number of steps per revolution) = 0.001 mm (resolution of wire draw + encoder combination).

[3] Value applies to wire draw mechanism.

Interfaces

Communication interface	EtherCAT®
Programmable/configurable	✓

Electronics

Connection type	Male connector, 1x, M12, 4-pin, axial Female connector, 2x, M12, 4-pin, axial
Supply voltage	10 V DC ... 30 V DC
Power consumption	≤ 3 W (without load)

Mechanics

Weight	3.7 kg
Measuring wire material	Highly flexible stranded steel 1,4401 stainless steel V4A
Measuring wire diameter	1.35 mm
Weight (measuring wire)	7.1 g/m
Housing material, wire draw mechanism	Aluminum (anodised), plastic
Spring return force	10 N ... 20 N [1]
Length of wire pulled out per revolution	332.4 mm
Life of wire draw mechanism	Typ. 1,000,000 cycles [2] [3]
Actual wire draw length	10.2 m
Wire acceleration	40 m/s²
Operating speed	8 m/s
Mounted encoder	AFM60 EtherCAT®, AFM60A-S1EB018X12, 1059061
Mounted mechanic	MRA-F130-110D2, 6028627

[1] These values were measred at an ambient temperature of 25 °C. There may be variations at other temperatures.
[2] Average values, which depend on the application.
[3] The service life depends on the type of load. This is influenced by environmental conditions, the installation location, the measuring range in use, the traversing speed, and acceleration.

Ambient data

EMC	According to EN 61000-6-2 and EN 61000-6-3 [1]
Enclosure rating	IP64, mounted mechanic IP67, Encoder (IEC 60529) [2]
Operating temperature range	–30 °C ... +70 °C

[1] The EMC according to the standards quoted is achieved if screened cables are used.
[2] With mating connector fitted.

Certificates

EU declaration of conformity	✓
UK declaration of conformity	✓
ACMA declaration of conformity	✓
Moroccan declaration of conformity	✓
China-RoHS	✓

Classifications

ECLASS 5.0	27270590
ECLASS 5.1.4	27270590
ECLASS 6.0	27270590
ECLASS 6.2	27270590
ECLASS 7.0	27270590
ECLASS 8.0	27270590
ECLASS 8.1	27270590
ECLASS 9.0	27270590
ECLASS 10.0	27270613

ECLASS 11.0	27270503
ECLASS 12.0	27270503
ETIM 5.0	EC001486
ETIM 6.0	EC001486
ETIM 7.0	EC001486
ETIM 8.0	EC001486
UNSPSC 16.0901	41112113

Dimensional drawing

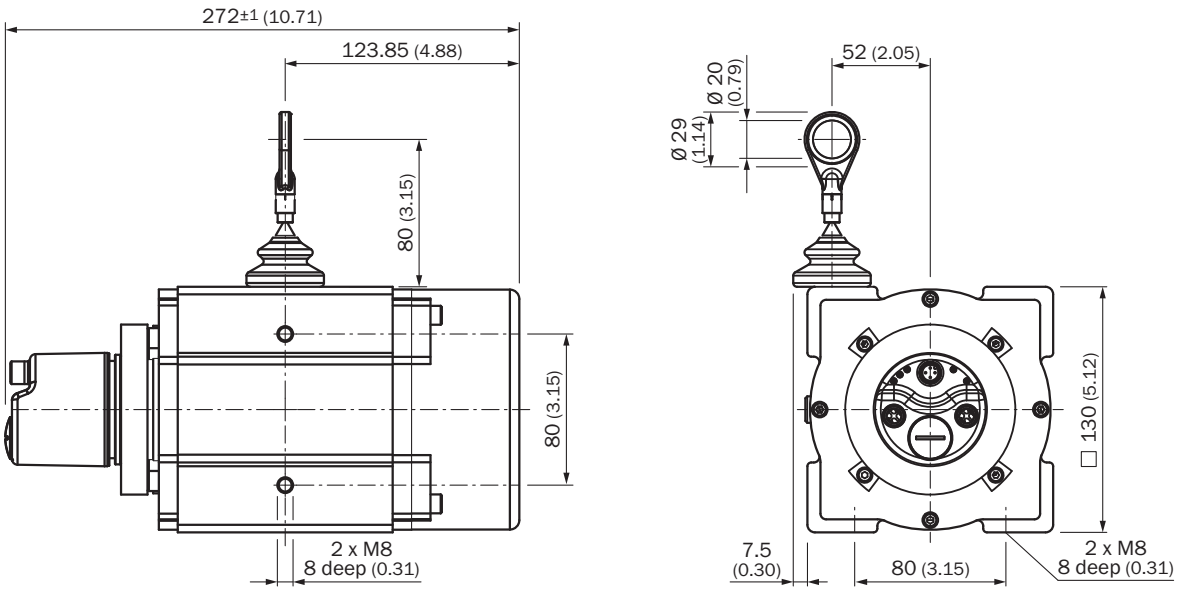

Dimensions in mm (inch)

PIN assignment Male connector

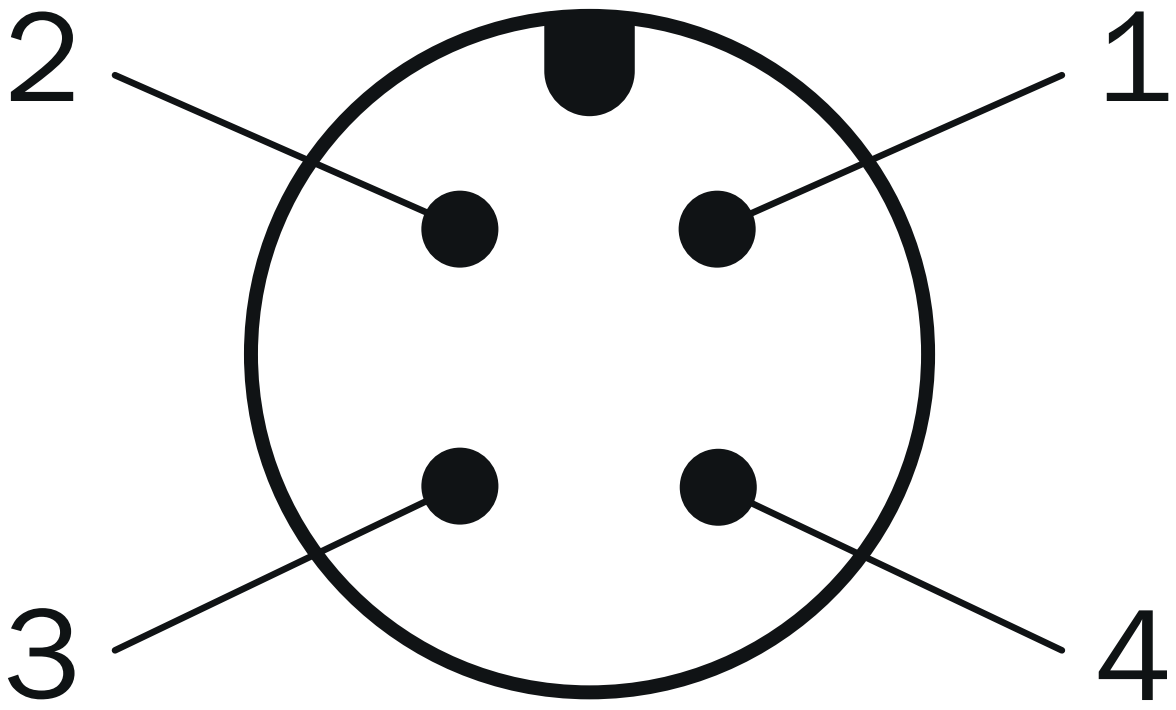

Supply voltage

PIN	Wire color	Signal
1	Brown	U_S 10 V ... 30 V
2	White	Not assigned
3	Blue	GND
4	Black	Not assigned

PIN assignment Female connector

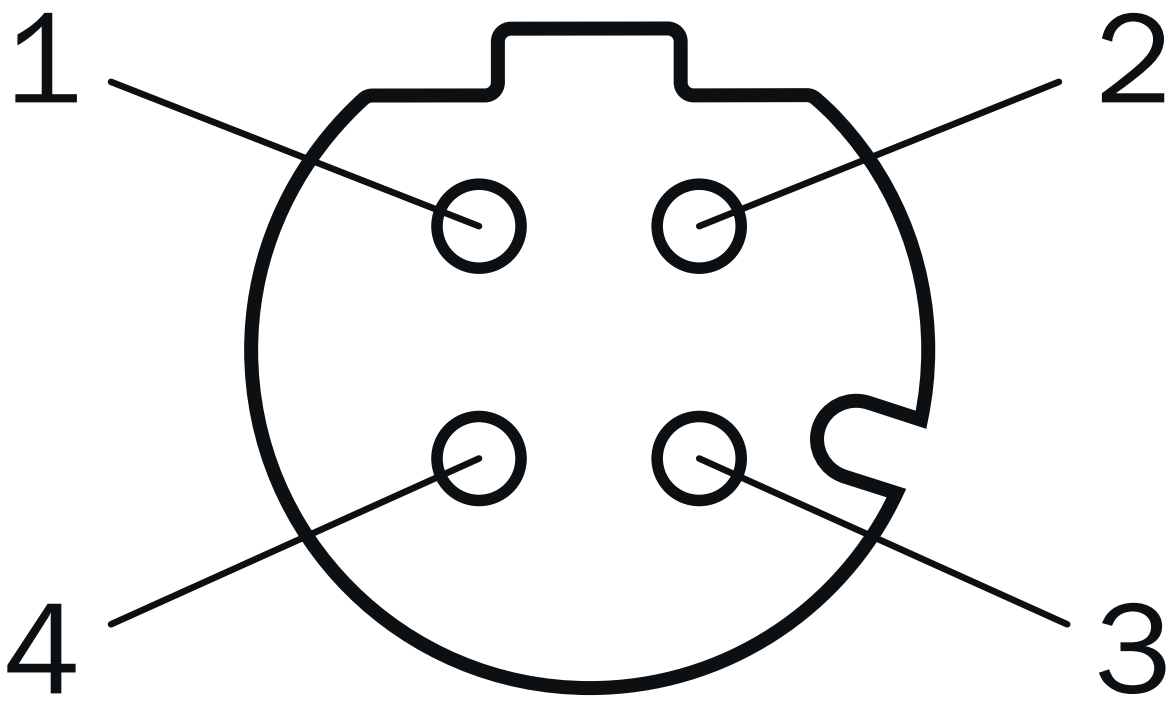

Port 1, Port 2

PIN	Wire color	Signal
1	Yellow	T x D+
2	White	R x D+
3	Orange	T x D-
4	Blue	R x D-

Connection diagram

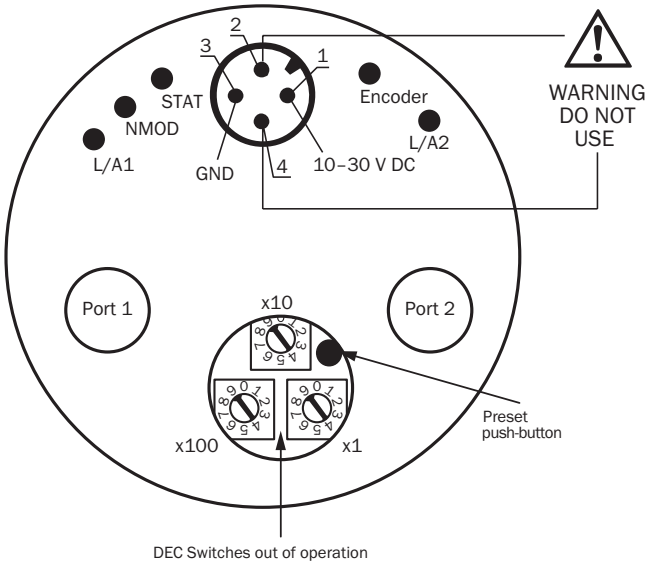

Recommended accessories

Other models and accessories ➜ www.sick.com/HighLine

	Brief description	Type	part no.
Mounting systems			
	• **Description:** Joint ball for later insertion in wire end ring with 20 mm diameter. The use of this joint ball enables movement in multiple levels of freedom.	Joint protection for wire rope BTF/PRF/MRA	5318683
	• **Description:** Compressed air attachment for MRA-F080... and MRA-F130... HighLine wire draw mechanism	MRA-F-P	6073769
	• **Description:** Flange adapter for HighLine wire draw mechanisms, adaption of face mount flange with centering hub 20 mm to 50 mm servo flange • **Material:** Aluminum • **Details:** Aluminum • **Items supplied:** Including 3 countersunk screws M3 x 10	BEF-FA-020-050WDE	2073776
	• **Description:** Additional brush attachment for wire draw mechanism MRA-F130 (5 m, 10 m, 20 m and 30 m from HighLine series)	MRA-F130-B	6038562
	• **Description:** Wire draw deflection pulley for wire draw mechanism MRA-F130 (5m, 10m, 20m and 30m from HighLine series)	MRA-F130-R	6028631

	Brief description	Type	part no.
connectors and cables			
	• **Connection type head A:** Female connector, M12, 4-pin, angled, A-coded • **Description:** Unshielded • **Connection systems:** Screw-type terminals • **Permitted cross-section:** ≤ 0.75 mm²	DOS-1204-W	6007303
	• **Connection type head A:** Female connector, M12, 4-pin, D-coded • **Connection type head B:** Female connector, RJ45, 8-pin • **Signal type:** Ethernet • **Cable:** CAT5, CAT5e • **Description:** Ethernet, shielded • **Note:** Cabinet through	Feedthrough female connector Ethernet RJ45	6048180
	• **Connection type head A:** Female connector, M12, 4-pin, straight, D-coded • **Signal type:** PROFINET • **Cable:** CAT5, CAT5e • **Description:** PROFINET, shielded • **Connection systems:** IDC quick connection • **Permitted cross-section:** 0.14 mm² ... 0.34 mm²	DOS-1204-GZ	6048263
	• **Connection type head A:** Female connector, M12, 4-pin, angled, D-coded • **Signal type:** PROFINET • **Cable:** CAT5, CAT5e • **Description:** PROFINET, shielded • **Connection systems:** IDC quick connection • **Permitted cross-section:** 0.14 mm² ... 0.34 mm²	DOS-1204-WZ	6048264
	• **Connection type head A:** Male connector, RJ45, 4-pin, straight • **Connection type head B:** Male connector, M12, 4-pin, angled, D-coded • **Signal type:** Ethernet, PROFINET • **Cable:** 30 m, 4-wire, CAT5, CAT5e, PVC • **Description:** Ethernet, shieldedPROFINET	SSL-2J04-F30MZ	6059450
	• **Connection type head A:** Male connector, RJ45, 4-pin, straight • **Signal type:** Ethernet, PROFINET • **Cable:** CAT5, CAT5e • **Description:** Ethernet, shieldedPROFINET • **Connection systems:** IDC quick connection • **Permitted cross-section:** 4 mm² ... 8 mm²	STE-0J04-GZ	6048260
	• **Connection type head A:** Male connector, M12, 4-pin, straight, D-coded • **Signal type:** PROFINET • **Cable:** CAT5, CAT5e • **Description:** PROFINET, shielded • **Connection systems:** IDC quick connection • **Permitted cross-section:** 0.14 mm² ... 0.34 mm²	STE-1204-GZ	6048261
	• **Connection type head A:** Male connector, M12, 4-pin, angled, D-coded • **Signal type:** PROFINET • **Cable:** CAT5, CAT5e • **Description:** PROFINET, shielded • **Connection systems:** IDC quick connection • **Permitted cross-section:** 0.14 mm² ... 0.34 mm²	STE-1204-WZ	6048262
	• **Connection type head A:** Female connector, M12, 4-pin, straight, A-coded • **Connection type head B:** Flying leads • **Signal type:** Sensor/actuator cable • **Cable:** 2 m, 4-wire, PUR, halogen-free • **Description:** Sensor/actuator cable, unshielded • **Application:** Uncontaminated zones, Zones with oils and lubricants, Robot, Drag chain operation	YF2A14-020UB3XLEAX	2095607
	• **Connection type head A:** Female connector, M12, 4-pin, straight, A-coded • **Connection type head B:** Flying leads • **Signal type:** Sensor/actuator cable • **Cable:** 5 m, 4-wire, PUR, halogen-free • **Description:** Sensor/actuator cable, unshielded • **Application:** Uncontaminated zones, Zones with oils and lubricants, Robot, Drag chain operation	YF2A14-050UB3XLEAX	2095608
	• **Connection type head A:** Female connector, M12, 4-pin, straight, A-coded • **Connection type head B:** Flying leads • **Signal type:** Sensor/actuator cable • **Cable:** 10 m, 4-wire, PUR, halogen-free • **Description:** Sensor/actuator cable, unshielded	YF2A14-100UB3XLEAX	2095609

	Brief description	Type	part no.
	• **Application:** Uncontaminated zones, Zones with oils and lubricants, Robot, Drag chain operation		
	• **Connection type head A:** Female connector, M12, 4-pin, straight, A-coded • **Connection type head B:** Flying leads • **Signal type:** Sensor/actuator cable • **Cable:** 25 m, 4-wire, PUR, halogen-free • **Description:** Sensor/actuator cable, unshielded • **Application:** Uncontaminated zones, Zones with oils and lubricants, Robot, Drag chain operation	YF2A14-250UB3XLEAX	2095615
	• **Connection type head A:** Female connector, M12, 4-pin, angled, A-coded • **Connection type head B:** Flying leads • **Signal type:** Sensor/actuator cable • **Cable:** 2 m, 4-wire, PUR, halogen-free • **Description:** Sensor/actuator cable, unshielded • **Application:** Uncontaminated zones, Zones with oils and lubricants, Robot, Drag chain operation	YG2A14-020UB3XLEAX	2095766
	• **Connection type head A:** Female connector, M12, 4-pin, angled, A-coded • **Connection type head B:** Flying leads • **Signal type:** Sensor/actuator cable • **Cable:** 5 m, 4-wire, PUR, halogen-free • **Description:** Sensor/actuator cable, unshielded • **Application:** Uncontaminated zones, Zones with oils and lubricants, Robot, Drag chain operation	YG2A14-050UB3XLEAX	2095767
	• **Connection type head A:** Female connector, M12, 4-pin, angled, A-coded • **Connection type head B:** Flying leads • **Signal type:** Sensor/actuator cable • **Cable:** 10 m, 4-wire, PUR, halogen-free • **Description:** Sensor/actuator cable, unshielded • **Application:** Uncontaminated zones, Zones with oils and lubricants, Robot, Drag chain operation	YG2A14-100UB3XLEAX	2095768
	• **Connection type head A:** Female connector, M12, 4-pin, angled, A-coded • **Connection type head B:** Flying leads • **Signal type:** Sensor/actuator cable • **Cable:** 25 m, 4-wire, PUR, halogen-free • **Description:** Sensor/actuator cable, unshielded • **Application:** Uncontaminated zones, Zones with oils and lubricants, Robot, Drag chain operation	YG2A14-250UB3XLEAX	2095771
	• **Connection type head A:** Male connector, M12, 4-pin, angled, D-coded • **Connection type head B:** Flying leads • **Signal type:** Ethernet, PROFINET • **Cable:** 25 m, 4-wire, PUR, halogen-free • **Description:** Ethernet, shieldedPROFINET • **Application:** Drag chain operation, Zones with oils and lubricants	YN2D24-250P-N1XLEAX	2106180
	• **Connection type head A:** Male connector, M12, 4-pin, angled, D-coded • **Connection type head B:** Flying leads • **Signal type:** Ethernet, PROFINET • **Cable:** 10 m, 4-wire, PUR, halogen-free • **Description:** Ethernet, shieldedPROFINET • **Application:** Drag chain operation, Zones with oils and lubricants	YN2D24-100P-N1XLEAX	2106176
	• **Connection type head A:** Male connector, M12, 4-pin, angled, D-coded • **Connection type head B:** Flying leads • **Signal type:** Ethernet, PROFINET • **Cable:** 5 m, 4-wire, PUR, halogen-free • **Description:** Ethernet, shieldedPROFINET • **Application:** Drag chain operation, Zones with oils and lubricants	YN2D24-050P-N1XLEAX	2106175
	• **Connection type head A:** Male connector, M12, 4-pin, angled, D-coded • **Connection type head B:** Flying leads • **Signal type:** Ethernet, PROFINET • **Cable:** 2 m, 4-wire, PUR, halogen-free • **Description:** Ethernet, shieldedPROFINET • **Application:** Drag chain operation, Zones with oils and lubricants	YN2D24-020P-N1XLEAX	2106174
	• **Connection type head A:** Male connector, M12, 4-pin, straight, D-coded • **Connection type head B:** Flying leads • **Signal type:** Ethernet, PROFINET • **Cable:** 10 m, 4-wire, PUR, halogen-free • **Description:** Ethernet, shieldedPROFINET • **Application:** Drag chain operation, Zones with oils and lubricants	YM2D24-100P-N1XLEAX	2106173
	• **Connection type head A:** Male connector, M12, 4-pin, straight, D-coded • **Connection type head B:** Flying leads • **Signal type:** Ethernet, PROFINET • **Cable:** 5 m, 4-wire, PUR, halogen-free • **Description:** Ethernet, shieldedPROFINET	YM2D24-050P-N1XLEAX	2106172

	Brief description	Type	part no.
	• **Application:** Drag chain operation, Zones with oils and lubricants		
	• **Connection type head A:** Male connector, M12, 4-pin, straight, D-coded • **Connection type head B:** Flying leads • **Signal type:** Ethernet, PROFINET • **Cable:** 2 m, 4-wire, PUR, halogen-free • **Description:** Ethernet, shieldedPROFINET • **Application:** Drag chain operation, Zones with oils and lubricants	YM2D24-020P-N1XLEAX	2106171
	• **Connection type head A:** Male connector, M12, 4-pin, angled, D-coded • **Connection type head B:** Male connector, M12, 4-pin, angled, D-coded • **Signal type:** Ethernet, PROFINET • **Cable:** 10 m, 4-wire, PUR, halogen-free • **Description:** Ethernet, shieldedPROFINET • **Application:** Drag chain operation, Zones with oils and lubricants	YN2D24-100P-N1N2D24	2106170
	• **Connection type head A:** Male connector, M12, 4-pin, angled, D-coded • **Connection type head B:** Male connector, M12, 4-pin, angled, D-coded • **Signal type:** Ethernet, PROFINET • **Cable:** 2 m, 4-wire, PUR, halogen-free • **Description:** Ethernet, shieldedPROFINET • **Application:** Drag chain operation, Zones with oils and lubricants	YN2D24-020P-N1N2D24	2106168
	• **Connection type head A:** Male connector, M12, 4-pin, straight, D-coded • **Connection type head B:** Male connector, M12, 4-pin, straight, D-coded • **Signal type:** Ethernet, PROFINET • **Cable:** 10 m, 4-wire, PUR, halogen-free • **Description:** Ethernet, shieldedPROFINET • **Application:** Drag chain operation, Zones with oils and lubricants	YM2D24-100P-N1M2D24	2106161
	• **Connection type head A:** Male connector, M12, 4-pin, straight, D-coded • **Connection type head B:** Male connector, M12, 4-pin, straight, D-coded • **Signal type:** Ethernet, PROFINET • **Cable:** 2 m, 4-wire, PUR, halogen-free • **Description:** Ethernet, shieldedPROFINET • **Application:** Drag chain operation, Zones with oils and lubricants	YM2D24-020P-N1M2D24	2106159
	• **Connection type head A:** Male connector, M12, 4-pin, straight, D-coded • **Connection type head B:** Male connector, M12, 4-pin, angled, D-coded • **Signal type:** Ethernet, PROFINET • **Cable:** 10 m, 4-wire, PUR, halogen-free • **Description:** Ethernet, shieldedPROFINET • **Application:** Drag chain operation, Zones with oils and lubricants	YM2D24-100P-N1N2D24	2106167
	• **Connection type head A:** Male connector, M12, 4-pin, straight, D-coded • **Connection type head B:** Male connector, M12, 4-pin, angled, D-coded • **Signal type:** Ethernet, PROFINET • **Cable:** 5 m, 4-wire, PUR, halogen-free • **Description:** Ethernet, shieldedPROFINET • **Application:** Drag chain operation, Zones with oils and lubricants	YM2D24-050P-N1N2D24	2106166
	• **Connection type head A:** Male connector, M12, 4-pin, straight, D-coded • **Connection type head B:** Male connector, M12, 4-pin, angled, D-coded • **Signal type:** Ethernet, PROFINET • **Cable:** 2 m, 4-wire, PUR, halogen-free • **Description:** Ethernet, shieldedPROFINET • **Application:** Drag chain operation, Zones with oils and lubricants	YM2D24-020P-N1N2D24	2106165
	• **Connection type head A:** Male connector, M12, 4-pin, straight, D-coded • **Connection type head B:** Male connector, RJ45, 4-pin, straight • **Signal type:** Ethernet, PROFINET • **Cable:** 2 m, 4-wire, PUR, halogen-free • **Description:** Ethernet, shieldedPROFINET • **Application:** Drag chain operation, Zones with oils and lubricants	YM2D24-020P-N1MRJA4	2106182
	• **Connection type head A:** Male connector, M12, 4-pin, straight, D-coded • **Connection type head B:** Male connector, RJ45, 4-pin, straight • **Signal type:** Ethernet, PROFINET • **Cable:** 10 m, 4-wire, PUR, halogen-free • **Description:** Ethernet, shieldedPROFINET • **Application:** Drag chain operation, Zones with oils and lubricants	YM2D24-100P-N1MRJA4	2106185
	• **Connection type head A:** Male connector, M12, 4-pin, angled, D-coded • **Connection type head B:** Male connector, RJ45, 4-pin, straight • **Signal type:** Ethernet, PROFINET • **Cable:** 10 m, 4-wire, PUR, halogen-free • **Description:** Ethernet, shieldedPROFINET	YN2D24-100P-N1MRJA4	2106164

	Brief description	Type	part no.
	• **Application:** Drag chain operation, Zones with oils and lubricants		
	• **Connection type head A:** Male connector, M12, 4-pin, angled, D-coded • **Connection type head B:** Male connector, RJ45, 4-pin, straight • **Signal type:** Ethernet, PROFINET • **Cable:** 5 m, 4-wire, PUR, halogen-free • **Description:** Ethernet, shieldedPROFINET • **Application:** Drag chain operation, Zones with oils and lubricants	YN2D24-050P-N1MRJA4	2106163
	• **Connection type head A:** Male connector, M12, 4-pin, angled, D-coded • **Connection type head B:** Male connector, RJ45, 4-pin, straight • **Signal type:** Ethernet, PROFINET • **Cable:** 2 m, 4-wire, PUR, halogen-free • **Description:** Ethernet, shieldedPROFINET • **Application:** Drag chain operation, Zones with oils and lubricants	YN2D24-020P-N1MRJA4	2106162
	• **Connection type head A:** Male connector, M12, 4-pin, straight, D-coded • **Connection type head B:** Male connector, M12, 4-pin, straight, D-coded • **Signal type:** Ethernet, PROFINET • **Cable:** 5 m, 4-wire, PUR, halogen-free • **Description:** Ethernet, shieldedPROFINET • **Application:** Drag chain operation, Zones with oils and lubricants	YM2D24-050P-N1M2D24	2106160
	• **Connection type head A:** Male connector, M12, 4-pin, angled, D-coded • **Connection type head B:** Male connector, RJ45, 4-pin, straight • **Signal type:** Ethernet, PROFINET • **Cable:** 3 m, 4-wire, PUR, halogen-free • **Description:** Ethernet, shieldedPROFINET • **Application:** Drag chain operation, Zones with oils and lubricants	YN2D24-030P-N1MRJA4	2144265
	• **Connection type head A:** Female connector, M12, 4-pin, straight, A-coded • **Connection type head B:** Flying leads • **Signal type:** Sensor/actuator cable • **Cable:** 0.6 m, 4-wire, PUR, halogen-free • **Description:** Sensor/actuator cable, unshielded • **Application:** Uncontaminated zones, Zones with oils and lubricants, Robot, Drag chain operation	YF2A14-C60UB3XLEAX	2145654
	• **Connection type head A:** Female connector, M12, 4-pin, straight, A-coded • **Connection type head B:** Flying leads • **Signal type:** Sensor/actuator cable • **Cable:** 1 m, 4-wire, PUR, halogen-free • **Description:** Sensor/actuator cable, unshielded • **Application:** Uncontaminated zones, Zones with oils and lubricants, Robot, Drag chain operation	YF2A14-010UB3XLEAX	2145655
	• **Connection type head A:** Female connector, M12, 4-pin, straight, A-coded • **Connection type head B:** Flying leads • **Signal type:** Sensor/actuator cable • **Cable:** 3 m, 4-wire, PUR, halogen-free • **Description:** Sensor/actuator cable, unshielded • **Application:** Uncontaminated zones, Zones with oils and lubricants, Robot, Drag chain operation	YF2A14-030UB3XLEAX	2145656
	• **Connection type head A:** Female connector, M12, 4-pin, angled, A-coded • **Connection type head B:** Flying leads • **Signal type:** Sensor/actuator cable • **Cable:** 0.6 m, 4-wire, PUR, halogen-free • **Description:** Sensor/actuator cable, unshielded • **Application:** Uncontaminated zones, Zones with oils and lubricants, Robot, Drag chain operation	YG2A14-C60UB3XLEAX	2145657
	• **Connection type head A:** Female connector, M12, 4-pin, angled, A-coded • **Connection type head B:** Flying leads • **Signal type:** Sensor/actuator cable • **Cable:** 1 m, 4-wire, PUR, halogen-free • **Description:** Sensor/actuator cable, unshielded • **Application:** Uncontaminated zones, Zones with oils and lubricants, Robot, Drag chain operation	YG2A14-010UB3XLEAX	2145658
	• **Connection type head A:** Male connector, M12, 4-pin, angled, D-coded • **Connection type head B:** Male connector, M12, 4-pin, angled, D-coded • **Signal type:** Ethernet, PROFINET • **Cable:** 5 m, 4-wire, PUR, halogen-free • **Description:** Ethernet, shieldedPROFINET • **Application:** Drag chain operation, Zones with oils and lubricants	YN2D24-050P-N1N2D24	2127662
	• **Connection type head A:** Male connector, M12, 4-pin, straight, D-coded • **Connection type head B:** Male connector, RJ45, 4-pin, straight • **Signal type:** Ethernet, PROFINET • **Cable:** 5 m, 4-wire, PUR, halogen-free • **Description:** Ethernet, shieldedPROFINET	YM2D24-050P-N1MRJA4	2106184

	Brief description	Type	part no.
	• **Application:** Drag chain operation, Zones with oils and lubricants		
	• **Connection type head A:** Female connector, M12, 4-pin, angled, A-coded • **Connection type head B:** Flying leads • **Signal type:** Sensor/actuator cable • **Cable:** 20 m, 4-wire, PUR, halogen-free • **Description:** Sensor/actuator cable, unshielded • **Application:** Uncontaminated zones, Zones with oils and lubricants, Robot, Drag chain operation	YG2A14-200UB3XLEAX	2095770
	• **Connection type head A:** Female connector, M12, 4-pin, straight, A-coded • **Connection type head B:** Flying leads • **Signal type:** Sensor/actuator cable • **Cable:** 20 m, 4-wire, PUR, halogen-free • **Description:** Sensor/actuator cable, unshielded • **Application:** Uncontaminated zones, Zones with oils and lubricants, Robot, Drag chain operation	YF2A14-200UB3XLEAX	2095611
Wire draw mechanism			
	• **Product segment:** Wire draw mechanism • **Product family:** Wire draw mechanism for wire draw encoders • **Description:** HighLine wire draw mechanism for servo flange with 6 mm shaft, measuring range 0 m ... 10 m • **Items supplied:** Without encoder	MRA-F130-110D2	6028627

SICK AT A GLANCE

SICK is one of the leading manufacturers of intelligent sensors and sensor solutions for industrial applications. A unique range of products and services creates the perfect basis for controlling processes securely and efficiently, protecting individuals from accidents and preventing damage to the environment.

We have extensive experience in a wide range of industries and understand their processes and requirements. With intelligent sensors, we can deliver exactly what our customers need. In application centers in Europe, Asia and North America, system solutions are tested and optimized in accordance with customer specifications. All this makes us a reliable supplier and development partner.

Comprehensive services complete our offering: SICK LifeTime Services provide support throughout the machine life cycle and ensure safety and productivity.

For us, that is “Sensor Intelligence.”

WORLDWIDE PRESENCE:

Contacts and other locations –www.sick.com