Data sheet



MZT8-03VPS-KRB

MZT8

CYLINDER SENSORS

SICK
Sensor Intelligence.



Ordering information

Type	part no.
MZT8-03VPS-KRB	1044463

Other models and accessories ➜ www.sick.com/MZT8

Detailed technical data

Features

Cylinder type	T-slot
Cylinder types with adapter	Profile cylinder Tie rod cylinder Round body cylinder Dovetail groove cylinder SMC rail CDQ2 SMC rail ECDQ2
Housing length	24 mm
Switching output	PNP
Switching frequency	1,000 Hz
Output function	NO
Electrical wiring	DC 3-wire
Enclosure rating	IP68 [1]

[1] According to EN 60529 (IP 67 / IP 68).

Mechanics/electronics

Supply voltage	10 V DC ... 30 V DC
Power consumption	10 mA, without load
Voltage drop	≤ 2.2 V
Continuous current I_a	≤ 200 mA
Protection class	III
Time delay before availability	25 ms
Response sensitivity, typ.	2.6 mT
Overrun distance, typ.	3 mm
Hysteresis, typ.	0.7 mT

[1] Supply voltage U_B and constant ambient temperature Ta.

Reproducibility	≤ 0.1 mT [1]
Reverse polarity protection	Yes
Short-circuit protection	Yes
Status indicator LED	Yes
Teach-in	No
Power-up pulse protection	Yes
Ambient operating temperature	–30 °C ... +80 °C
Shock and vibration resistance	30 g, 11 ms / 10 ... 55 Hz, 1 mm
EMC	According to EN 60947-5-2
Connection type	Cable with connector M8, 3-pin, with knurled nut, drag chain use, 5 m
Connection type Detail	
Conductor cross section	0.14 mm²
Cable diameter	Ø 2.9 mm
Bending radius	With fixed installation > 3 x cable diameter
	For flexible use > 10 x cable diameter
Torsion force	± 270° / 10 cm
Torsion cycles	> 2,000,000
Drag chain cycles	> 2,000,000
Drag chain parameters	Traversing speed max. 3.3 m/s at 5 m horizontal traversing length
	Acceleration max. 5 m/s²
Cable outlet	Axial
Material	
Housing	Plastic, PA12
Cable	PUR
UL File No.	NRKH.E181493 & NRKH7.E181493

[1] Supply voltage U_B and constant ambient temperature Ta.

Safety-related parameters

$MTTF_D$	2,289 years
DC_{avg}	0 %
T_M (mission time)	20 years

Certificates

EU declaration of conformity	✓
UK declaration of conformity	✓
ACMA declaration of conformity	✓
Moroccan declaration of conformity	✓
China-RoHS	✓
cULus certificate	✓

Classifications

ECLASS 5.0	27270104
ECLASS 5.1.4	27270104

ECLASS 6.0	27270104
ECLASS 6.2	27270104
ECLASS 7.0	27270104
ECLASS 8.0	27270104
ECLASS 8.1	27270104
ECLASS 9.0	27270104
ECLASS 10.0	27270104
ECLASS 11.0	27270104
ECLASS 12.0	27274301
ETIM 5.0	EC002544
ETIM 6.0	EC002544
ETIM 7.0	EC002544
ETIM 8.0	EC002544
UNSPSC 16.0901	39122230

Installation note

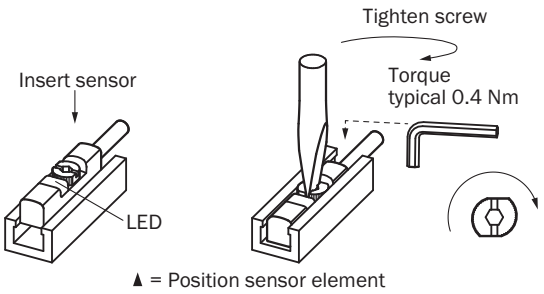

Connection diagram Cd-002

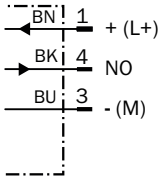

Dimensional drawing Cable with connector M8, with knurled nut

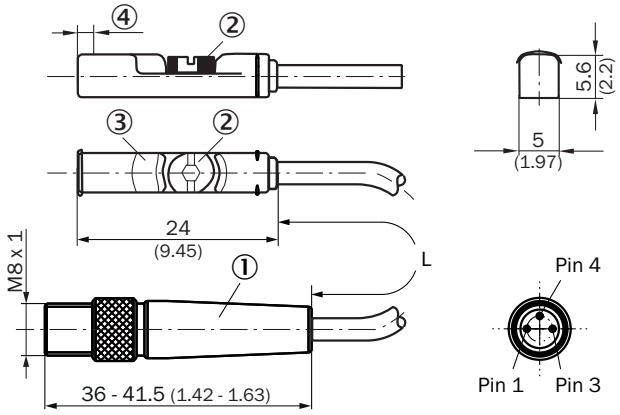

Dimensions in mm (inch)
① Connection
② Fixing screw SW 2.0
③ Display LED
④ Sensor element position; short overrun distance (3 mm): 2.25 mm, long overrun distance (9 mm): 1.5 mm

Part no.	Type	L	Number of cores
1044464	MZT8-03VPS-KRD	300 mm	3
1048502	MZT8-03VPS-KRDS04	300 mm	3
1067400	MZT8-03VPS-KRDS12	300 mm	3
1044459	MZT8-03VPS-KR0	500 mm	3
1044935	MZT8-03VNS-KR0	500 mm	3
1046374	MZT8-03VPS-KR0S01	500 mm	3
1048050	MZT8-28VPS-KR0	500 mm	3
1048174	MZT8-28VPS-KR0S02	500 mm	3
1048503	MZT8-03VPS-KR0S05	500 mm	3
1069392	MZT8-03VPS-KRDS13	500 mm	3
1069393	MZT8-03VP0-KRDS14	500 mm	3
1069394	MZT8-03VNS-KRDS15	500 mm	3
1069395	MZT8-03VN0-KRDS16	500 mm	3
1109451	MZT8-2V8PSWKR0	500 mm	3
1144310	MZT8-03VPS-KRDS46	1.5 m	3
1106079	MZT8-03VPS-KRDS35	2 m	3
1044463	MZT8-03VPS-KRB	5 m	3

Recommended accessories

Other models and accessories ➜ www.sick.com/MZT8

	Brief description	Type	part no.
device protection and care			
	• **Description:** Protective adapter • **Material:** Zinc diecast • **Items supplied:** Mounting hardware included • **Suitable for:** MZT7, RZT7, MZT8	BEF-SG-MRZT	2077201

	Brief description	Type	part no.
Mounting systems			
	• **Description:** Mounting bracket for integrated profile cylinder/tie-rod cylinder • **Material:** Zinc diecast • **Details:** Zinc diecast • **Items supplied:** Mounting hardware included	BEF-KHZ-PT1	2022702
	• **Description:** Mounting bracket on round body cylinder with piston diameter of 8 mm ... 130 mm, ambient temperature min –30 °C max 80 °C • **Material:** Stainless steel, Zinc cast • **Details:** Stainless steel, Zinc cast • **Packing unit:** 1 piece • **Suitable for:** T-slot	BEF-KHZ-RT1-130	2077684
	• **Description:** Mounting bracket on round body cylinder with piston diameter of 12 mm, ambient temperature min 0 °C max 50 °C • **Dimensions (W x H x L):** 22.4 m • **Material:** Plastic, Aluminum • **Details:** Plastic, Aluminum • **Packing unit:** 1 piece • **Suitable for:** T-slot	BEF-KHZ-RT-12	2077681
	• **Description:** Mounting bracket on round body cylinder with piston diameter of 8 mm ... 25 mm, ambient temperature min –30 °C max 80 °C • **Material:** Stainless steel, Zinc cast • **Details:** Stainless steel, Zinc cast • **Packing unit:** 1 piece • **Suitable for:** T-slot	BEF-KHZ-RT1-25	2077682
	• **Description:** Mounting bracket on round body cylinder with piston diameter of 16 mm, ambient temperature min 0 °C max 50 °C • **Dimensions (W x H x L):** 26.6 m • **Material:** Plastic, Aluminum • **Details:** Plastic, Aluminum • **Packing unit:** 1 piece • **Suitable for:** T-slot	BEF-KHZ-RT-16	2077680
	• **Description:** Mounting bracket on round body cylinder with piston diameter of 8 mm ... 63 mm, ambient temperature min –30 °C max 80 °C • **Material:** Stainless steel, Zinc cast • **Details:** Stainless steel, Zinc cast • **Packing unit:** 1 piece • **Suitable for:** T-slot	BEF-KHZ-RT1-63	2077683
	• **Description:** Mounting bracket on round body cylinder with piston diameter of 20 mm, ambient temperature min 0 °C max 50 °C • **Dimensions (W x H x L):** 30.6 m • **Material:** Plastic, Aluminum • **Details:** Plastic, Aluminum • **Packing unit:** 1 piece • **Suitable for:** T-slot	BEF-KHZ-RT-20	2077679
	• **Description:** Mounting bracket on round body cylinder with piston diameter of 25 mm, ambient temperature min 0 °C max 50 °C • **Dimensions (W x H x L):** 35.7 m • **Material:** Plastic, Aluminum • **Details:** Plastic, Aluminum • **Packing unit:** 1 piece • **Suitable for:** T-slot	BEF-KHZ-RT-25	2077678
	• **Description:** Mounting bracket on round body cylinder with piston diameter of 32 mm, ambient temperature min 0 °C max 50 °C • **Dimensions (W x H x L):** 42.9 m • **Material:** Plastic, Aluminum • **Details:** Plastic, Aluminum • **Packing unit:** 1 piece • **Suitable for:** T-slot	BEF-KHZ-RT-32	2077677
	• **Description:** Mounting bracket on round body cylinder with piston diameter of 40 mm, ambient temperature min 0 °C max 50 °C • **Dimensions (W x H x L):** 50.9 m • **Material:** Plastic, Aluminum • **Details:** Plastic, Aluminum • **Packing unit:** 1 piece	BEF-KHZ-RT-40	2077676

	Brief description	Type	part no.
	• **Suitable for:** T-slot		
	• **Description:** Mounting bracket on round body cylinder with piston diameter of 50 mm, ambient temperature min 0 °C max 50 °C • **Dimensions (W x H x L):** 61.8 m • **Material:** Plastic, Aluminum • **Details:** Plastic, Aluminum • **Packing unit:** 1 piece • **Suitable for:** T-slot	BEF-KHZ-RT-50	2077675
	• **Description:** Mounting bracket on round body cylinder with piston diameter of 63 mm, ambient temperature min 0 °C max 50 °C • **Dimensions (W x H x L):** 73.9 m • **Material:** Plastic, Aluminum • **Details:** Plastic, Aluminum • **Packing unit:** 1 piece • **Suitable for:** T-slot	BEF-KHZ-RT-63	2077674
	• **Description:** Mounting bracket for cylinder with dovetail slot • **Material:** Aluminum • **Details:** Aluminum • **Items supplied:** Without mounting hardware	BEF-KHZ-ST1	2022703
	• **Description:** Mounting bracket for mounting on SMC rails ECDQ2 (T-slot) • **Material:** Aluminum • **Details:** Aluminum • **Items supplied:** Without mounting hardware	BEF-KHZ-TT1	2046439
	• **Description:** Mounting bracket for mounting on SMC rails CDQ2 (T-slot) • **Material:** Aluminum • **Details:** Aluminum • **Items supplied:** Without mounting hardware	BEF-KHZ-TT2	2046440

	Brief description	Type	part no.
connectors and cables			
	• **Connection type head A:** Female connector, M8, 3-pin, straight, A-coded • **Description:** Unshielded • **Connection systems:** Screw-type terminals • **Permitted cross-section:** 0.14 mm² ... 0.5 mm²	DOS-0803-G	7902077
	• **Connection type head A:** Female connector, M8, 3-pin, angled, A-coded • **Description:** Unshielded • **Connection systems:** Solder connection • **Permitted cross-section:** ≤ 0.25 mm²	DOS-0803-W	7902078
	• **Connection type head A:** Male connector, M8, 3-pin, straight, A-coded • **Description:** Unshielded • **Connection systems:** Screw-type terminals • **Permitted cross-section:** 0.14 mm² ... 0.5 mm²	STE-0803-G	6037322
	• **Connection type head A:** Female connector, M8, 3-pin, straight, A-coded • **Connection type head B:** Flying leads • **Signal type:** Sensor/actuator cable • **Cable:** 2 m, 3-wire, PVC • **Description:** Sensor/actuator cable, unshielded • **Application:** Zones with chemicals, Uncontaminated zones	YF8U13-020VA1XLEAX	2095860
	• **Connection type head A:** Female connector, M8, 3-pin, straight, A-coded • **Connection type head B:** Flying leads • **Signal type:** Sensor/actuator cable • **Cable:** 5 m, 3-wire, PVC • **Description:** Sensor/actuator cable, unshielded • **Application:** Zones with chemicals, Uncontaminated zones	YF8U13-050VA1XLEAX	2095884
	• **Connection type head A:** Female connector, M8, 3-pin, angled, A-coded • **Connection type head B:** Flying leads • **Signal type:** Sensor/actuator cable • **Cable:** 2 m, 3-wire, PVC • **Description:** Sensor/actuator cable, unshielded • **Application:** Zones with chemicals, Uncontaminated zones	YG8U13-020VA1XLEAX	2096165
	• **Connection type head A:** Female connector, M8, 3-pin, angled, A-coded • **Connection type head B:** Flying leads • **Signal type:** Sensor/actuator cable • **Cable:** 5 m, 3-wire, PVC • **Description:** Sensor/actuator cable, unshielded • **Application:** Zones with chemicals, Uncontaminated zones	YG8U13-050VA1XLEAX	2096166
	• **Connection type head A:** Female connector, M8, 3-pin, straight, A-coded • **Connection type head B:** Flying leads • **Signal type:** Sensor/actuator cable • **Cable:** 2 m, 3-wire, PUR, halogen-free • **Description:** Sensor/actuator cable, unshielded • **Application:** Uncontaminated zones, Zones with oils and lubricants, Robot, Drag chain operation	YF8U13-020UA1XLEAX	2094782
	• **Connection type head A:** Female connector, M8, 3-pin, straight, A-coded • **Connection type head B:** Flying leads • **Signal type:** Sensor/actuator cable • **Cable:** 5 m, 3-wire, PUR, halogen-free • **Description:** Sensor/actuator cable, unshielded • **Application:** Uncontaminated zones, Zones with oils and lubricants, Robot, Drag chain operation	YF8U13-050UA1XLEAX	2094788
	• **Connection type head A:** Female connector, M8, 3-pin, angled, A-coded • **Connection type head B:** Flying leads • **Signal type:** Sensor/actuator cable • **Cable:** 2 m, 3-wire, PUR, halogen-free • **Description:** Sensor/actuator cable, unshielded • **Application:** Uncontaminated zones, Zones with oils and lubricants, Robot, Drag chain operation	YG8U13-020UA1XLEAX	2094794
	• **Connection type head A:** Female connector, M8, 3-pin, straight, A-coded • **Connection type head B:** Flying leads • **Signal type:** Sensor/actuator cable • **Cable:** 3 m, 3-wire, PUR, halogen-free • **Description:** Sensor/actuator cable, unshielded	YF8U13-030UA1XLEAX	2094787

	Brief description	Type	part no.
	• **Application:** Uncontaminated zones, Zones with oils and lubricants, Robot, Drag chain operation		
	• **Connection type head A:** Female connector, M8, 3-pin, angled, A-coded • **Connection type head B:** Flying leads • **Signal type:** Sensor/actuator cable • **Cable:** 0.6 m, 3-wire, PUR, halogen-free • **Description:** Sensor/actuator cable, unshielded • **Application:** Uncontaminated zones, Zones with oils and lubricants, Robot, Drag chain operation	YG8U13-C60UA1XLEAX	2145889
	• **Connection type head A:** Female connector, M8, 3-pin, angled, A-coded • **Connection type head B:** Flying leads • **Signal type:** Sensor/actuator cable • **Cable:** 3 m, 3-wire, PUR, halogen-free • **Description:** Sensor/actuator cable, unshielded • **Application:** Uncontaminated zones, Zones with oils and lubricants, Robot, Drag chain operation	YG8U13-030UA1XLEAX	2145891
	• **Connection type head A:** Female connector, M8, 3-pin, straight, A-coded • **Connection type head B:** Flying leads • **Signal type:** Sensor/actuator cable • **Cable:** 0.6 m, 3-wire, PVC • **Description:** Sensor/actuator cable, unshielded • **Application:** Zones with chemicals, Uncontaminated zones	YF8U13-C60VA1XLEAX	2146368

SICK AT A GLANCE

SICK is one of the leading manufacturers of intelligent sensors and sensor solutions for industrial applications. A unique range of products and services creates the perfect basis for controlling processes securely and efficiently, protecting individuals from accidents and preventing damage to the environment.

We have extensive experience in a wide range of industries and understand their processes and requirements. With intelligent sensors, we can deliver exactly what our customers need. In application centers in Europe, Asia and North America, system solutions are tested and optimized in accordance with customer specifications. All this makes us a reliable supplier and development partner.

Comprehensive services complete our offering: SICK LifeTime Services provide support throughout the machine life cycle and ensure safety and productivity.

For us, that is “Sensor Intelligence.”

WORLDWIDE PRESENCE:

Contacts and other locations –www.sick.com