DRAWING MADE IN AMERICAN PROJECTION

© 1971 BY AMP INCORPORATED. ALL RIGHTS RESERVED. AMP PRODUCTS COVERED BY PATENTS AND/OR PATENTS PENDING.

Unpublished copy not to be reproduced nor published without written permission of AMP Incorporated

REVISIONS				
ZONE	LTR	DESCRIPTION	DATE	APPROVED
	O	REDRAWN & RELEASED, WAS 5041-435	9/24/71	[illegible]
	A	REV. PER ECN D-644	10-9-75	[illegible]
	B	REV. PER ECN G-117	3/15/79	DK
	C	REV PER ECN H-017	5-27-80	[illegible]
	D	OBS-2; ECN DF-0364	10-13-80	[illegible]

205694-1 1. AS SHOWN
2. MAT'L-BRASS, ZINC
PLATED PER QQ-Z-325 TYPE II, CLASS 3.

205694-2 [redacted] STEEL,

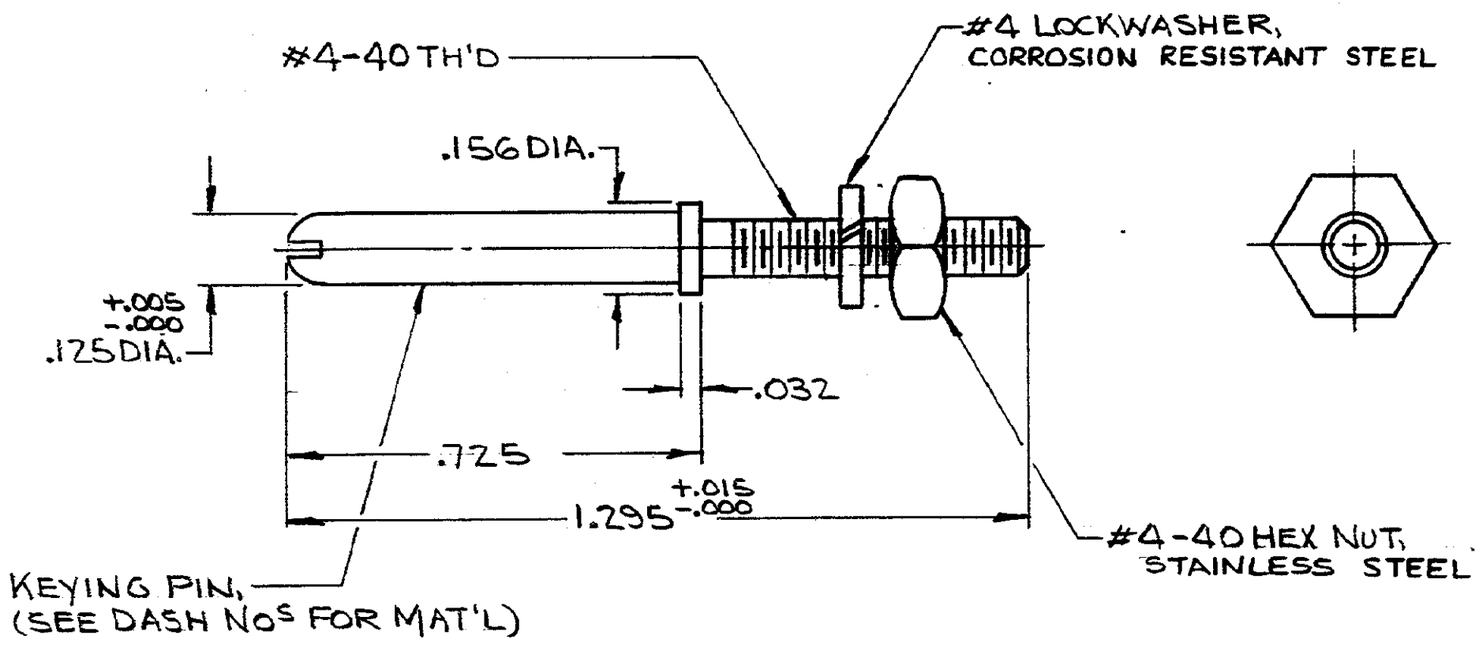

1. PARTS PACKAGED UNASSEMBLED.

UNLESS OTHERWISE SPECIFIED DIMENSIONS ARE IN INCHES TOLERANCES ON: DECIMALS ±.005 ANGLES ±	CONTRACT NO.	AMP INCORPORATED HARRISBURG, PENNSYLVANIA
MATERIAL SEE CALLOUT	DR 9/24/71	NAME PIN ASSY, KEYING, LONG "HDR" SERIES
	CHK 9/28/71	
	APPD 9/28/71	
	REL 9/29/71	
	DSGN APPD	SIZE B · CODE IDENT NO. 00779 · NUMBER 205694
	OTHER APPD	SCALE — · SHEET 1 OF 1

CUSTOMER DRAWING

AMP 1470-1 REV (7/68)