PART NUMBER	ROW	E	POWER	SIGNAL		POWER	E
			P2	2	1	P1	
10128858-001LF	D	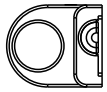	FM	S	S	STD	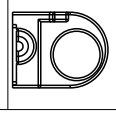
	C			S	S		
	B			S	S		
	A			S	S		

CONTACT WIRE TABLE	
CONTACT PITCH	WIRE GAUGE
7.62	8-9
6.35	10-11
	12-14
5.08	12-14
2.54	22-26

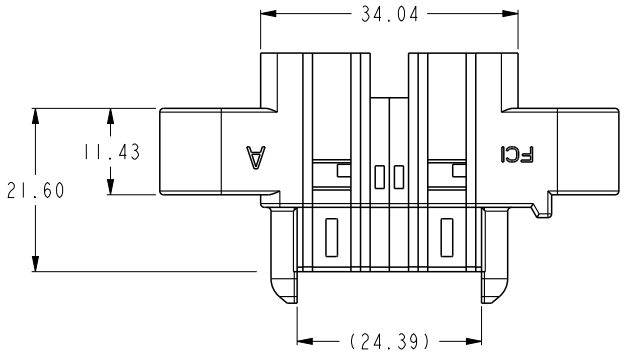

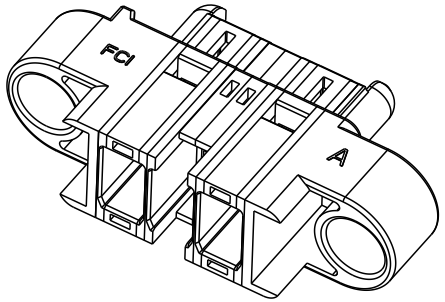

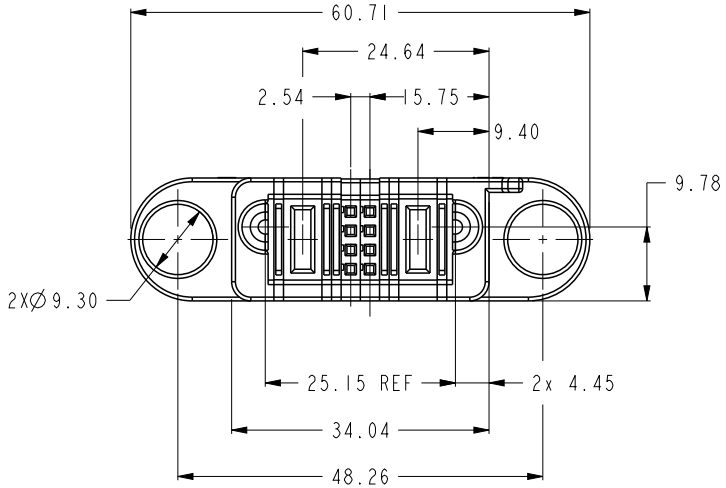

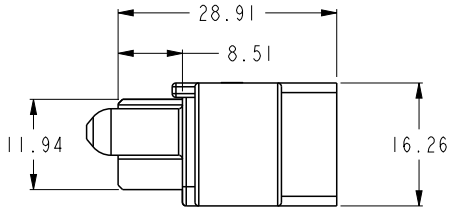

CONTACT TABLE	
CODE	DESCRIPTION
FM	FIRST MATE POWER CONTACT
STD	STANDARD POWER CONTACT
S	SIGNAL CONTACT

© 2016 AFCI

spec ref	*		dr	Jackbin Zou	2014/04/14	projection	MM
tolerance std ISO 406 ISO 1101	TOLERANCES UNLESS OTHERWISE SPECIFIED		eng	Rainbow Zhan	2016/10/20		
			chr	Cheng-Ling Tao	2016/10/20		
			appr	Pei-Ming Zheng	2016/10/20	product family	PwrBlade+
surface - ISO 1302	linear	0.X ±0.50	Amphenol FCI	title	IP+8S+IP PMT	dwg no	10128858-001
		0.XX ±0.25			PwrBlade+ Cable Receptacle Housing		
		0.XXX ±0.10					
	angular	0° ±2°		cat. no. -	Product - Customer Drw		

size	scale	rev
A4	1:1	A

ecn no -

rel level Released

sheet 1 of 2

Creo File - REV E - 2016-02-12

PDS: Rev :A STATUS:Released Printed: Oct 24, 2016

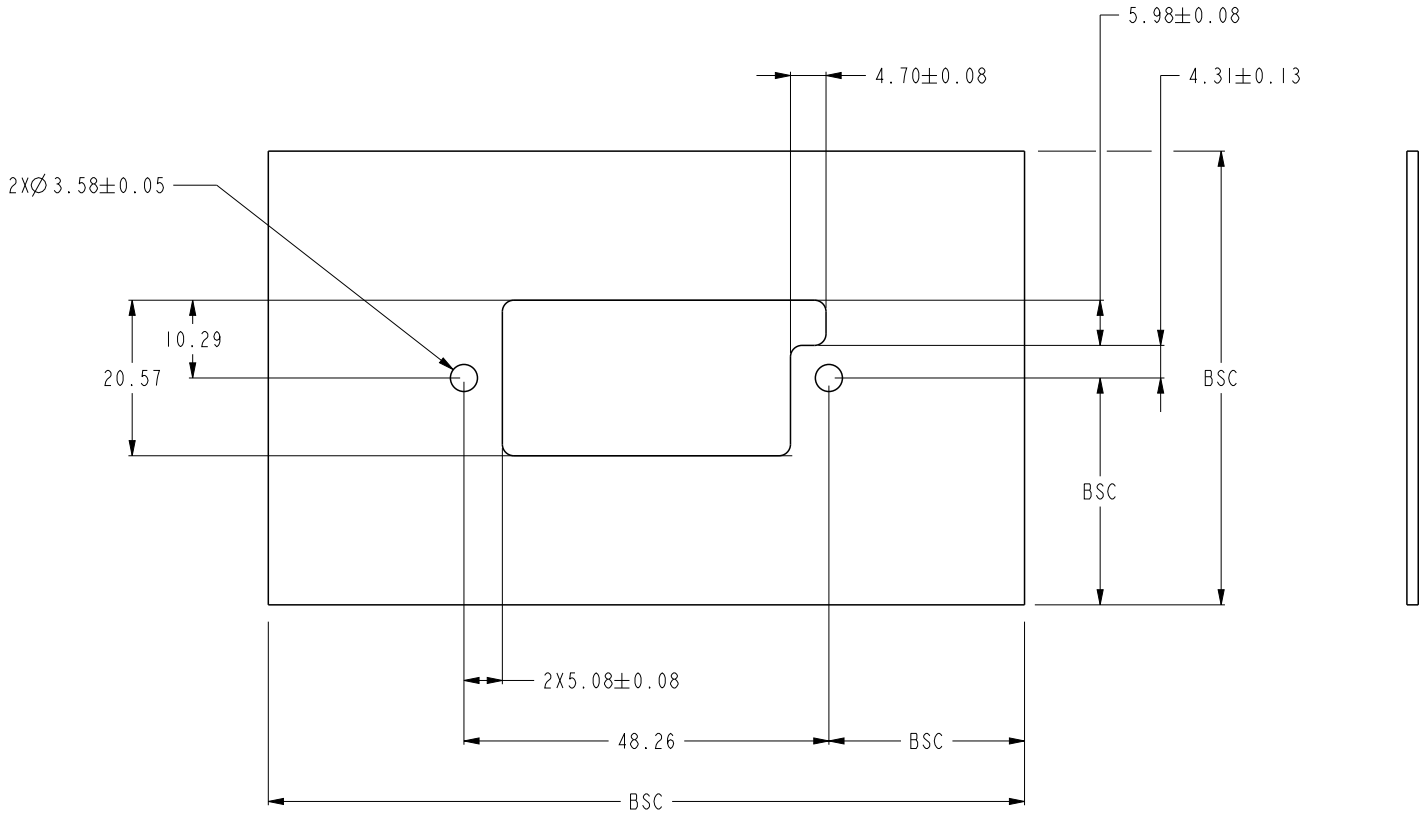

RECOMMENDED PANEL LAYOUT

NOTES
1. PANEL THICKNESS: 0.79-2.54mm
2 DATUM AND BASIC DIMENIONS WERE ESTABLISHED BY CUSTOMER.
3. APPLICABLE COMPONENTS
   a) APPLICABLE HIGH POWER CRIMP CONTACT: 10135689-*.
   b) APPLICABLE LOW POWER CRIMP CONTACT: 10135690-*.
   c) APPLICABLE CONTACT SECONDARY LOCK FOR HIGH POWER : 10073097-DGC004LF
   d) APPLICABLE SIGNAL CONTACT: 76347-DGC302LF
4. PRODUCT SPEC: GS-12-1267
5. APPLICATION SPEC: GS-20-0435

spec ref	*			dr	Jackbin Zou	2014/04/14	projection
tolerance std	TOLERANCES UNLESS OTHERWISE SPECIFIED			eng	Rainbow Zhan	2016/10/20	MM
ISO 406 ISO 1101				chr	Cheng-Ling Tao	2016/10/20	size A4 / scale 1:1
				appr	Pei-Ming Zheng	2016/10/20	ecn no -
							product family PwrBlade+ / rel level Released
surface -	linear	0.X	±0.50	Amphenol FCi	title	IP+8S+IP PMT	dwg no 10128858-001 / rev A
ISO 1302		0.XX	±0.25			PwrBlade+ Cable Receptacle Housing	
		0.XXX	±0.10				
	angular	0°	±2°		cat. no. -	Product - Customer Drw	sheet 2 of 2

© 2016 AFCI

Creo File - REV E - 2016-02-12