CUDEVICES

MODEL: CMB-6544PF | **DESCRIPTION:** ELECTRET CONDENSER MICROPHONE

SPECIFICATIONS

parameter	conditions/description	min	typ	max	units
directivity	omnidirectional				
sensitivity (S)	f = 1 kHz, 1 Pa, 0 dB = 1 V/1 Pa	-47	-44	-41	dB
operating voltage			4.5	10	Vdc
output impedance (Zout)	f = 1 kHz, 1 Pa		1		KΩ
sensitivity reduction (ΔS-Vs)	f = 1 kHz, 1 Pa, Vs = 4.5 ~ 1.5 Vdc		-3		dB
frequency (f)		20		20,000	Hz
current consumption (LOSS)	Vs = 4.5 Vdc, RL = 1 KΩ			0.5	mA
signal to noise ratio (S/N)	f = 1 kHz, 1 Pa, A-weighted		60		dBA
operating temperature		-40		70	°C
storage temperature		-40		70	°C
dimension	ø9.4 x 6.5 mm				
weight				0.7	g
material	AL				
terminal	pin type (hand soldering only)				
RoHS	yes				

note: We use the "Pascal (Pa)" indication of sensitivity as per the recomendation of I.E.C. (International Electrotechnical Commission). The sensitivity of "Pa" will increase 20dB compared to the "ubar" indication. Example: -60dB (0dB = 1V/ubar) = -40dB (1V/Pa)

MECHANICAL DRAWING

unit: mm

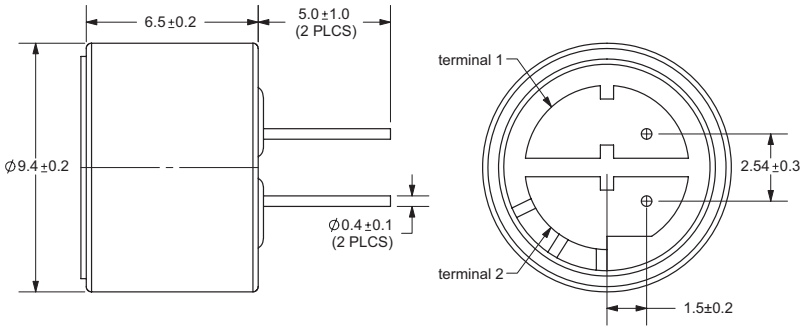

MEASUREMENT CIRCUIT

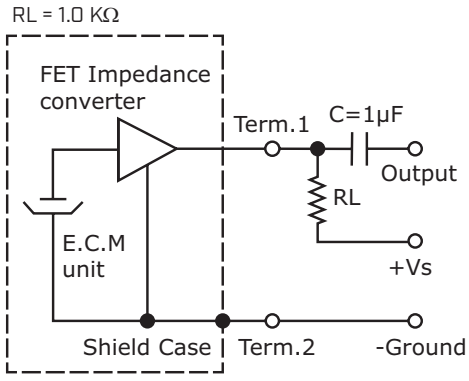

Schematic Diagram

FREQUENCY RESPONSE CURVE

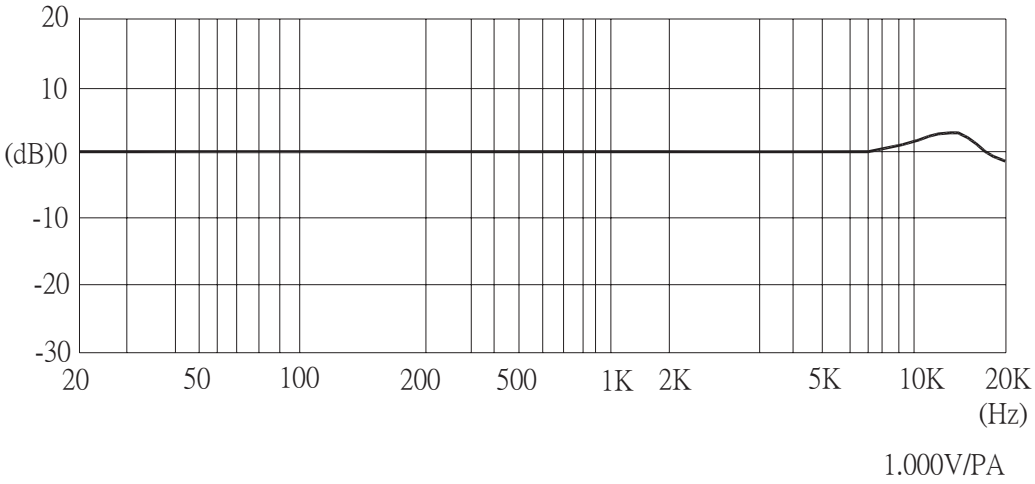

MECHANICAL CHARACTERISTICS

item	test condition	evaluation standard
soldering heat resistance	Soldering iron of +270 ±5°C should be placed on the terminal for 2 ±0.5 seconds.	No interference in operation.
PCB wire pull strength	The pull force should be applid to double lead wire: Horizontal 4.9 N (0.5 kg) for 30 seconds	No damage or cutting off.
vibration test	The part should be measured after a vibration amplitude of 1.5 mm with 10~55 Hz band of vibration frequency to each of the 3 perpendicular directions for 2 hours.	After any tests, the sensitivity should be within ±3 dB of the initial sensitivity.
drop test	The part without packaging is subjected to 3 drops on each axis from the height of 1 m onto a 20 mm thick wooden board.	

ENVIRONMENT TEST

item	test condition	evaluation standard
high temperature test	After being placed in a chamber at +70°C for 72 hours.	After any tests and 6 hours of conditioning at +25°C, the sensitivity should be within ±3 dB of the initial sensitivity.
low temperature test	After being placed in a chamber at -20°C for 72 hours.	
thermal shock	After being placed in a chamber at +40°C and 90 ±5% RH for 240 hours.	
temperature cycle test	The part will be subjected to 10 cycles. One cycle will consist of: 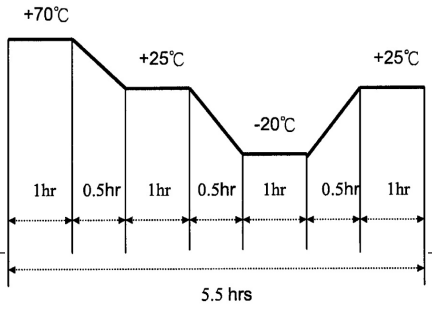	

TEST CONDITIONS

standard test conditions	a) Temperature: +5 ~ +35°C	b) Humidity: 45 ~ 85%	c) Pressure: 860 ~ 1060 mbar
judgement test conditions	a) Temperature: +25 ±2°C	b) Humidity: 60 ~ 70%	c) Pressure: 860 ~ 1060 mbar

PACKAGING

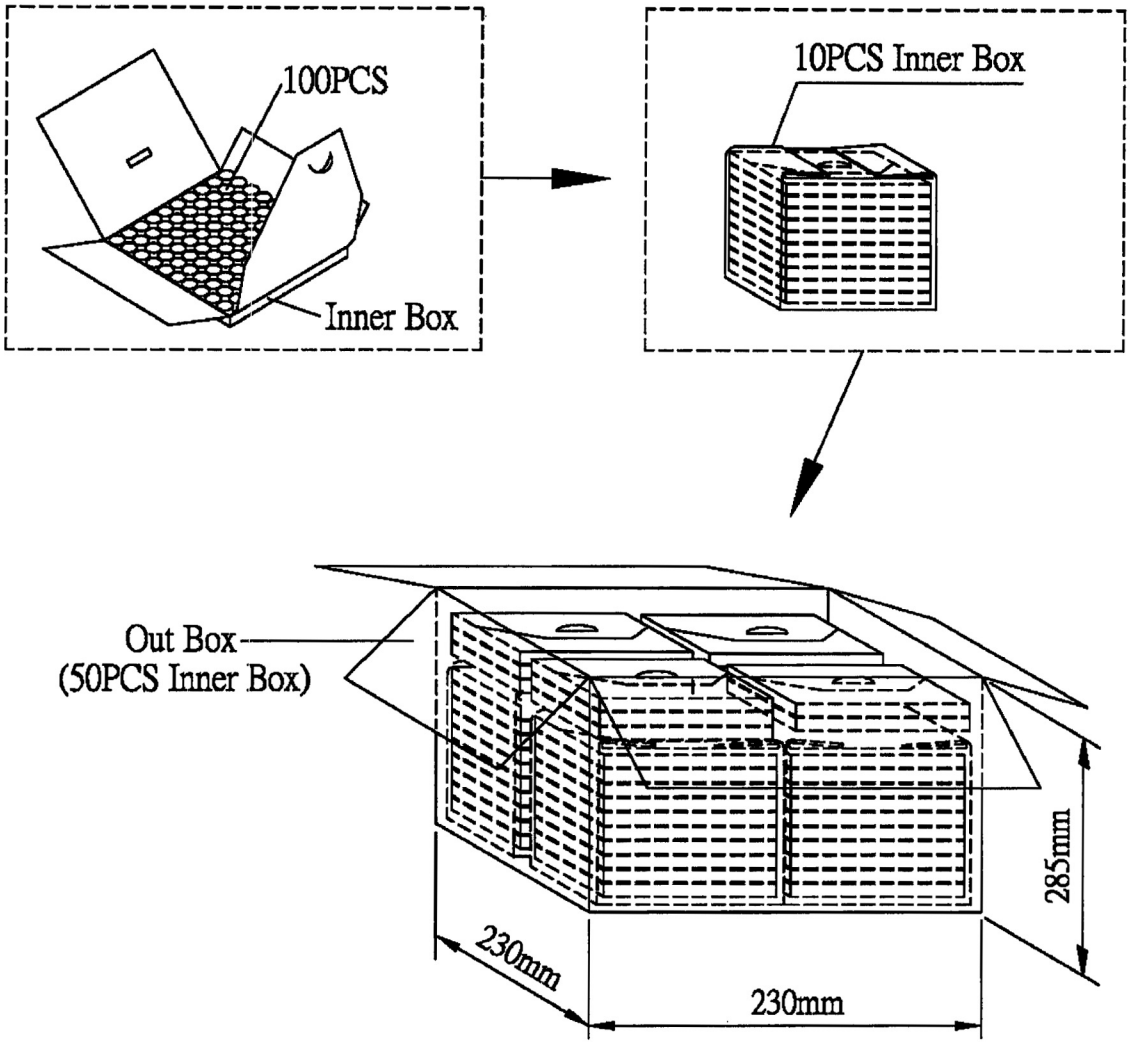

Inner Box	100mmx100mmx8mm	1x100PCS=100PCS
Out Box	230mmx230mmx285mm	100PCSx50=5,000PCS

REVISION HISTORY

rev.	description	date
1.0	initial release	05/15/2008
1.01	new template applied	09/15/2011
1.02	updated drawing	06/26/2012
1.03	widened operating temperature and storage temperature ranges	01/22/2014
1.04	brand update	01/17/2020
1.05	logo, datasheet style update	08/05/2022

The revision history provided is for informational purposes only and is believed to be accurate.

CUI Devices offers a one (1) year limited warranty. Complete warranty information is listed on our website.

CUI Devices reserves the right to make changes to the product at any time without notice. Information provided by CUI Devices is believed to be accurate and reliable. However, no responsibility is assumed by CUI Devices for its use, nor for any infringements of patents or other rights of third parties which may result from its use.

CUI Devices products are not authorized or warranted for use as critical components in equipment that requires an extremely high level of reliability. A critical component is any component of a life support device or system whose failure to perform can be reasonably expected to cause the failure of the life support device or system, or to affect its safety or effectiveness.

cuidevices.com