HC-M-ADP-EMC - Adapter

1420486

https://www.phoenixcontact.com/us/products/1420486

Please be informed that the data shown in this PDF document is generated from our online catalog. Please find the complete data in the user documentation. Our general terms of use for downloads are valid.



Adapter, application: Shield adapters

Commercial data

Item number	1420486
Packing unit	1 pc
Minimum order quantity	1 pc
Sales key	BF62
Product key	BF7ACZ
Catalog page	Page 583 (C-2-2019)
GTIN	4055626225272
Weight per piece (including packing)	20.3 g
Weight per piece (excluding packing)	20.7 g
Customs tariff number	85389099
Country of origin	AT

Technical data

Product properties

Product type	Adapter
Application	Shield adapters

Environmental and real-life conditions

Ambient conditions

Ambient temperature (operation)	-40 °C ... 85 °C

Drawings

Dimensional drawing

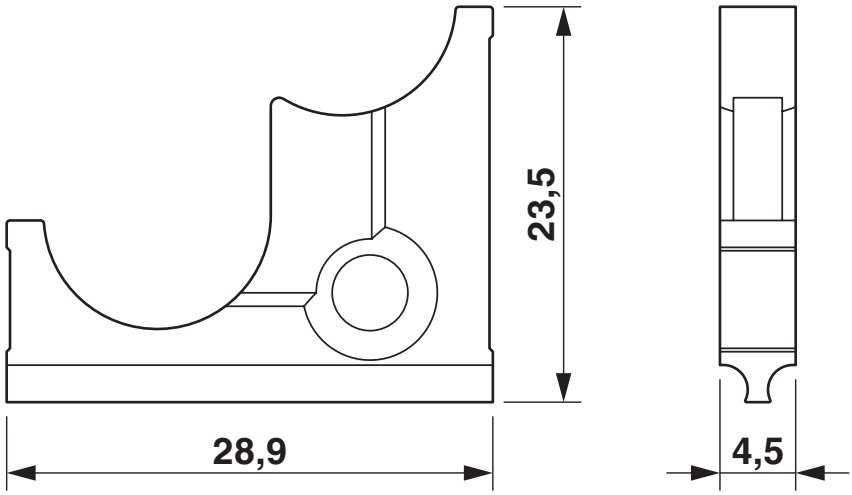

Dimensional drawing

Classifications

ECLASS

ECLASS-11.0	27440192
ECLASS-12.0	27440192
ECLASS-13.0	27440192

ETIM

ETIM 9.0	EC002943

UNSPSC

UNSPSC 21.0	39121400

Environmental product compliance

EU RoHS

Fulfills EU RoHS substance requirements	Yes, No exemptions

China RoHS

Environment friendly use period (EFUP)	EFUP-E
	No hazardous substances above the limits

EU REACH SVHC

REACH candidate substance (CAS No.)	No substance above 0.1 wt%

Phoenix Contact 2024 © - all rights reserved
https://www.phoenixcontact.com

Phoenix Contact USA
586 Fulling Mill Road
Middletown, PA 17057, United States
(+717) 944-1300
info@phoenixcon.com