MIKROELEKTRONIKA D.O.O, Batajnički drum 23, 11000 Belgrade, Serbia
VAT: SR105917343 Registration No. 20490918
Phone: + 381 11 78 57 600 Fax: + 381 11 63 09 644 E-mail: office@mikroe.com
www.mikroe.com

Radar Click

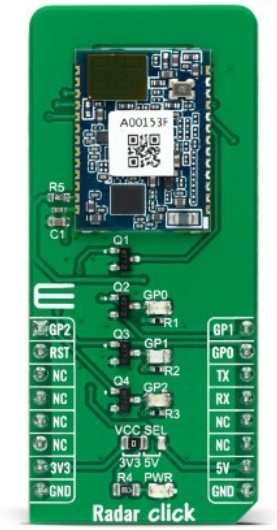

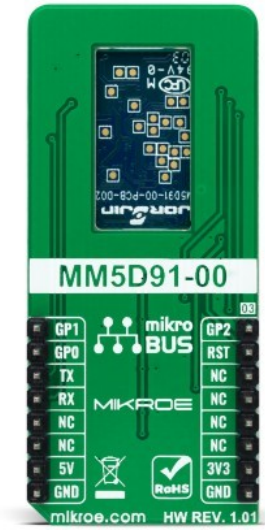

PID: MIKROE-5183

Radar Click is a compact add-on board that alerts you to the presence of an intruder via interpreting the infrared radiation that emanates from their body. This board features the MM5D91-00, a presence detection sensor module that integrates 60GHz mmWave technology that counts the number of people entering or exiting an entrance from Jorjin Technologies Inc. It includes the ARM Cortex-M4F based processor system, 1Tx, 3Rx antenna, and integrated regulator, alongside azimuth and elevation field of view of ±45° and ±40°. Its detection goes up to 10m for macro and 5m for micro motion with environmental-factors immunity such as temperature, wind, sunlight, and dust. This Click board™ is suitable for various presence sensing applications, from office and home to commercial buildings and more.

Radar Click is supported by a mikroSDK compliant library, which includes functions that simplify software development. This Click board™ comes as a fully tested product, ready to be used on a system equipped with the mikroBUS™ socket.

How does it work?

Radar Click as its foundation uses the MM5D91-00, a presence detection sensor module with an integrated mmWave technology from Jorjin Technologies Inc. It counts the number of people entering or exiting an entrance, simplifies the implementation of mmWave sensors in the band of 61.0 to 61.5GHz, and includes the ARM Cortex-M4F-based processor system 1Tx 3Rx antenna and onboard regulator. This Click board™ is built to demonstrate the function of the entrance counter of the 60GHz radar sensor with its sophisticated radar presence detection algorithms.

Mikroe produces entire development toolchains for all major microcontroller architectures.
Committed to excellency, we are dedicated to helping engineers bring the project development up to speed and achieve outstanding results.

ISO 27001: 2013 certification of informational security management system.
ISO 14001: 2015 certification of environmental management system.
OHSAS 18001: 2008 certification of occupational health and safety management system.

ISO 9001: 2015 certification of quality management system (QMS).

MIKROELEKTRONIKA D.O.O, Batajnički drum 23, 11000 Belgrade, Serbia
VAT: SR105917343 Registration No. 20490918
Phone: + 381 11 78 57 600 Fax: + 381 11 63 09 644 E-mail: office@mikroe.com
www.mikroe.com

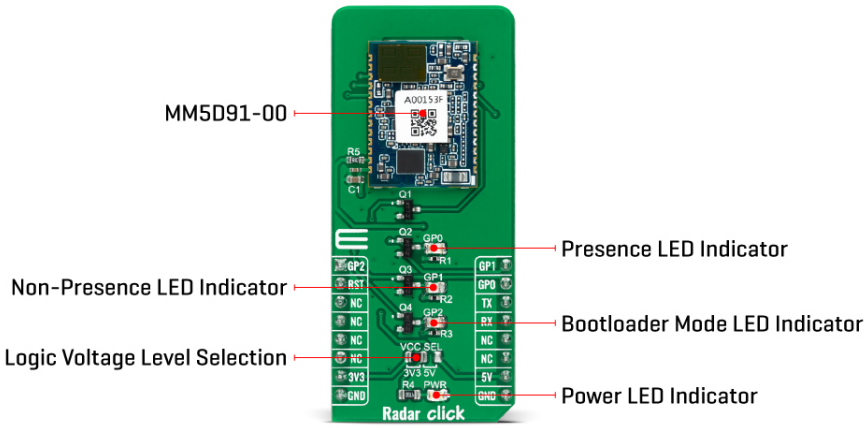

Characterized by low power consumption and high resolution, this board represents a suitable solution for various presence sensing applications, from office and home to commercial buildings and more. Its detection range goes up to 10m for macro motion, representing human movements, and 5m for micro motion, which stands for stationary human (normal breathing and blinking eyes) in sitting or standing positions with no active signs for at least 30 seconds. Immune to environmental factors such as temperature, wind, sunlight, and dust/debris, the MM5D91-00 also comes with azimuth and elevation field of view of ±45° and ±40°.

The MM5D91-00 communicates with MCU using the UART interface with the default baud rate of 115200bps for the data transfer. In addition, it also uses several mikroBUS™ pins. An active-low reset signal routed on the RST pin of the mikroBUS™ socket activates a hardware reset of the radar module. It also has three general-purpose pins, routed to the AN, PWM, and INT pins of the mikroBUS™ socket marked as GP2, GP1, and GP0 to signal an essential change in device status, alongside its green, red, and blue LED indicators. Green LED stands for active presence indication, while red LED represents non-presence indication. Blue LED serves for bootloader mode indication.

This Click board™ can operate with both 3.3V and 5V logic voltage levels selected via the VCC SEL jumper. This way, it is allowed for both 3.3V and 5V capable MCUs to use the communication lines properly. However, the Click board™ comes equipped with a library that contains easy-to-use functions and an example code that can be used, as a reference, for further development.

Specifications

Type	Proximity
Applications	Can be used for various presence sensing applications, from office and home to commercial buildings and more
On-board modules	MM5D91-00 - presence detection sensor module from Jorjin Technologies Inc
Key Features	Integrated mmWave technology, low power consumption, high resolution, adjustable detection range, immune to environmental factors, up to 10m/5m for macro/micro motion, and more

Mikroe produces entire development toolchains for all major microcontroller architectures.
Committed to excellency, we are dedicated to helping engineers bring the project development up to speed and achieve outstanding results.

ISO 27001: 2013 certification of informational security management system.
ISO 14001: 2015 certification of environmental management system.
OHSAS 18001: 2008 certification of occupational health and safety management system.

ISO 9001: 2015 certification of quality management system (QMS).

MIKROELEKTRONIKA D.O.O, Batajnički drum 23, 11000 Belgrade, Serbia
VAT: SR105917343 Registration No. 20490918
Phone: + 381 11 78 57 600 Fax: + 381 11 63 09 644 E-mail: office@mikroe.com
www.mikroe.com

Interface	UART
ClickID	No
Compatibility	mikroBUS™
Click board size	L (57.15 x 25.4 mm)
Input Voltage	3.3V or 5V

Pinout diagram

This table shows how the pinout on Radar Click corresponds to the pinout on the mikroBUS™ socket (the latter shown in the two middle columns).

Notes	Pin	mikroBUS				Pin	Notes
General Purpose 2	**GP2**	1	AN	PWM	16	**GP1**	General Purpose 1
Reset	**RST**	2	RST	INT	15	**GP0**	General Purpose 0
	NC	3	CS	RX	14	**TX**	UART TX
	NC	4	SCK	TX	13	**RX**	UART RX
	NC	5	MISO	SCL	12	NC	
	NC	6	MOSI	SDA	11	NC	
Power Supply	**3.3V**	7	3.3V	5V	10	**5V**	Power Supply
Ground	**GND**	8	GND	GND	9	**GND**	Ground

Onboard settings and indicators

Label	Name	Default	Description
LD1	GP0	-	Presence LED Indicator
LD2	GP1	-	Non-Presence LED Indicator
LD3	GP2	-	Bootloader Mode LED Indicator
LD4	PWR	-	Power LED Indicator
JP1	VCC SEL	Left	Logic Level Voltage Selection 3V3/5V: Left position 3V3, Right position 5V

Radar Click electrical specifications

Description	Min	Typ	Max	Unit
Supply Voltage	3.3	-	5	V
Frequency Range	61	-	61.5	GHz
E-Plane	25	40	55	Deg
H-Plane	30	45	60	Deg
Operating Temperature Range	-10	+25	+70	°C

Software Support

We provide a library for the Radar Click as well as a demo application (example), developed using MikroElektronika compilers. The demo can run on all the main MikroElektronika development boards.

Mikroe produces entire development toolchains for all major microcontroller architectures.
Committed to excellency, we are dedicated to helping engineers bring the project development up to speed and achieve outstanding results.

ISOQAR REGISTERED
UKAS MANAGEMENT SYSTEMS
ISO 27001: 2013 certification of informational security management system.
ISO 14001: 2015 certification of environmental management system.
OHSAS 18001: 2008 certification of occupational health and safety management system.
TÜV SÜD ISO 9001
ISO 9001: 2015 certification of quality management system (QMS).

MIKROELEKTRONIKA D.O.O, Batajnički drum 23, 11000 Belgrade, Serbia
VAT: SR105917343 Registration No. 20490918
Phone: + 381 11 78 57 600 Fax: + 381 11 63 09 644 E-mail: office@mikroe.com
www.mikroe.com

Package can be downloaded/installed directly from NECTO Studio Package Manager(recommended way), downloaded from our LibStock™ or found on Mikroe github account.

Library Description

This library contains API for Radar Click driver.

Key functions

- radar_get_event This function waits for an IN/OUT event or ACK command response.
- radar_get_temperature This function reads the chip internal temperature.
- radar_set_detection_range This function sets the min and max presence detection values.

Example Description

This example demonstrates the use of Radar Click board™ by reading and parsing events as well as the module internal temperature.

The full application code, and ready to use projects can be installed directly from NECTO Studio Package Manager(recommended way), downloaded from our LibStock™ or found on Mikroe github account.

Other Mikroe Libraries used in the example:

- MikroSDK.Board
- MikroSDK.Log
- Click.Radar

Additional notes and informations

Depending on the development board you are using, you may need USB UART click, USB UART 2 Click or RS232 Click to connect to your PC, for development systems with no UART to USB interface available on the board. UART terminal is available in all MikroElektronika compilers.

mikroSDK

This Click board™ is supported with mikroSDK - MikroElektronika Software Development Kit. To ensure proper operation of mikroSDK compliant Click board™ demo applications, mikroSDK should be downloaded from the LibStock and installed for the compiler you are using.

For more information about mikroSDK, visit the official page.

Resources

mikroBUS™

mikroSDK

Mikroe produces entire development toolchains for all major microcontroller architectures.
Committed to excellency, we are dedicated to helping engineers bring the project development up to speed and achieve outstanding results.

ISOQAR REGISTERED
UKAS MANAGEMENT SYSTEMS
ISO 27001: 2013 certification of informational security management system.
ISO 14001: 2015 certification of environmental management system.
OHSAS 18001: 2008 certification of occupational health and safety management system.

TÜV SÜD ISO 9001
ISO 9001: 2015 certification of quality management system (QMS).

MIKROELEKTRONIKA D.O.O, Batajnički drum 23, 11000 Belgrade, Serbia
VAT: SR105917343 Registration No. 20490918
Phone: + 381 11 78 57 600 Fax: + 381 11 63 09 644 E-mail: office@mikroe.com
www.mikroe.com

Click board™ Catalog

Click Boards™

Downloads

Radar click example on Libstock

MM5D91-00 datasheet

Radar click 2D and 3D files

Radar click schematic

Mikroe produces entire development toolchains for all major microcontroller architectures.
Committed to excellency, we are dedicated to helping engineers bring the project development up to speed and achieve outstanding results.

ISO 27001: 2013 certification of informational security management system.
ISO 14001: 2015 certification of environmental management system.
OHSAS 18001: 2008 certification of occupational health and safety management system.

ISO 9001: 2015 certification of quality management system (QMS).